Service Manual

74 SD315/01B/02B/05B/07B

Stereo cassette deck

For repair information cassette mechanism see Service Manual of "Recorders tape deck NMZ-5PB/NMZ-5RP"

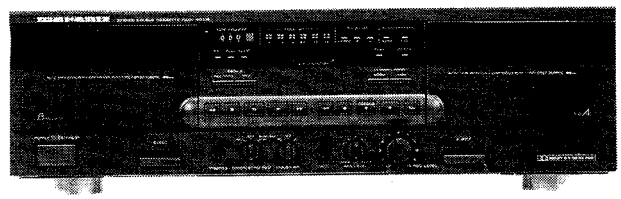

TABLE OF CONTENTS

SECTION	PAGE
1. TECNICAL SPECIFICATIONS (DIN)	1
2. TECNICAL DATA	1
3. BLOCK DIAGRAM	2
4. CONECTION DIAGRAM	5
5. SCHEMATIC DIAGRAM AND PARTS LOCATION (pattern side)	7
6. MICRO-PROCESSOR I/O PINS AND THEIR FUNCTIONS	11
7. EXPLODED VIEW AND PARTS LIST	22
8. TEST EQUIPMENT REQUIRED FOR SERVICING	23
9. DISASSEMBLY	24
10. ELECTRICAL ADJUSTMENT	25
11. ELECTRICAL MEASUREMENTS AND ADJUSTMENTS	26
12. ELECTRICAL PARTS LIST	28

marantz®

model SD315

First issue: 1990

4822 725 50918

MARANTZ DESIGN AND SERVICE

Using superior design and selected high grade components, MARANTZ company has created the ultimate in stereo sound.
Only **original MARANTZ parts** can insure that your MARANTZ product will continue to perform to the specifications for which it is famous.

Parts for your MARANTZ equipment are generally available to our National Marantz Subsidiary or Agent.

MARANTZ INTERNATIONAL
Vestdijk 9
5600 MD Eindhoven
The Netherlands
Phone: +31/40.758290
Telefax: +31/40.75.82.99
Telex: 35000 PHTC NL routing IND NLMTFAT

ORDERING PARTS:

Parts can be ordered either by mail or by telex. In both cases, correct part number has to be specified.
The following information must be supplied to eliminate delays in processing your order:

1. Complete address
2. Complete part numbers and quantities required
3. Description of parts
4. Model number for which part is required
5. Way of shipment
6. Signature: any order form or telex must be signed otherwise such part order will be considered as null and void.

PARTS ORDERING

Parts may be ordered at the following addresses:

AUSTRIA
HORNYPHON
Vertriebsgesellschaft GmbH
Wienerbergstrasse 1
A 1101 Wien
Austria
Telex: 132.332

BELGIUM
SVD DIVISION MARANTZ
Industrialaan 1
1720 Groot-Bijgaarden
Belgium
Telex: 24466

CHILE
MARANTZ
DIVISION OF PHILIPS S.A.
AV. Santa Maria, 0760
Casilla 2687
Santiago
Telex: 240.239

DENMARK
MARANTZ
DIVISION OF PHILIPS
SERVICE A/S
Prags Boulevard 80
Postbox 1919
DK-2300 København S
Denmark
Telex: 31201

FINLAND
MARANTZ
DIVISION OF OY PHILIPS Ab
Kaivokatu 8
00100 Helsinki
Finland
Telex: 124811

FRANCE
MARANTZ FRANCE
4 Rue Bernard Palissy
92600 Asnières
France
Telex: 611651

GERMANY
MARANTZ GERMANY GmbH
Alexanderstrasse 1
2000 Hamburg
Germany

THE NETHERLANDS
Elpro Marantz
Wint Hontlaan 28
3526 KV Utrecht
The Netherlands
Telex: 4748

NORWAY
MARANTZ
DIVISION OF PHILIPS A/S
Sandstuveien 40
0680 Oslo 6
Norway
Telex: 72640

GREAT BRITAIN
MARANTZ AUDIO U.K. Ltd
Unit 15/16
Saxon Way Industrial Estate
Moor Lane
Harmondsworth UB7 OLW
Great Britain
Telex: 935196

GREECE
SHERTON ELECTRONICS S.A.
P.O.Box 21025
Hippocratus Street 188
Athens 11471
Greece
Telex: 216.795

JAPAN
MARANTZ JAPAN, Inc.
35-1, 7-chome, Sagamiono
Sagamihara-shi, Kanagawa
Japan

KUWAIT
AL ALAMIAH ELECTRONICS
Ussama Building
Fahd al Saleem Street
P.O.Box 23781
Safat-Kuwait
Telex: 22694

ITALY
MARANTZ ITALIANA S.P.A.
Via Chiese, 74
20126 Milano
Italy

SAUDI ARABIA
AL ALAMIAH ELECTRONICS
P.O.Box 5954
University Street
Riyadh 11432
Saudi Arabia
Telex: 401530

SOUTH AFRICA
MARANTZ
DIVISION OF PHILIPS S.A.
Main Road Martindale
P.O. Box. 58088
Newville 21114
South Africa

SPAIN
PHONO S.A.
Ignacio Iglesias 10
Badalona (Barcelona)
Spain
Telex: 59355

SWEDEN
MARANTZ
DIVISION OF PHILIPS
Försäljning AB
Tegeluddsvägen 1
S-115 84 Stockholm
Sweden
Telex: 14060

SWITZERLAND
MARANTZ
Technischer Service
Duenstrasse 3
3186 Düdingen
Switzerland

TURKEY
DOGRUOL Ltd.
I.M.C.
6 Blok N°6310
Unkapani
Istanbul
Turkey
Telex: 22085

MALTA
CACHIA & GALEA
Republic Street, 68D
Valetta
Telex: 1682

PORTUGAL
MARANTZ
Divisao philips S.A. service
Outurela-carnaxide
2795 LinDA-A-VELHA
Telex: 43906

All of the above locations are fully equipped to take care of your total service needs. Because various countries have differing configuration requirements, it is necessary that you contact the service facility in your particular country. In the event that there is no service location listed for your country, please, contact the nearest facility for the necessary assistance.

In case of difficulties, do not hesitate to contact the Technical Department at abovementioned address.

1. TECNICAL SPECIFICATIONS (DIN)

Mechanism . . . . . 2 x logic
Heads : PLAY . . . . . 1 (Deck A)
: REC/PLAY . . . . . 1 (Deck B)
: Erase . . . . . 1 (Deck B)
Motor . . . . . DC servo x 2

Overall Frequency Response at –20 dB
Normal Tape . . . . . 20 Hz ~ 16 kHz
CrO_2 Tape . . . . . 20 Hz ~ 17 kHz
Metal Tape . . . . . 20 Hz ~ 18 kHz

Signal-to-Noise Ratio:
Dolby B/C (ON) . . . . . 65/70 dB
Dolby (OFF) . . . . . 56 dB

Wow and Flutter
WRMS 0.07%

Outputs
Line Level/Impedance . . . . . 500 mV/3 ohms
Headphone Level/Matching Impedance
. . . . . 50 mV/60 ohms

Input (Level at 0 VU)
Line Sensitivity/Impedance . . . . . 70 mV/60 k ohms

Power Requirements
/02B/05B/07B Versions . . . . 220/240 V AC, 50/60 Hz
/01B Version . . . . . 110/120/220/240 V AC, 50/60 Hz
Power Consumption 14W
Dimensions
Panel Width . . . . . 420 mm
Panel Height . . . . . 118 mm
Depth . . . . . 280 mm
Weight . . . . . 5.1 kg

2. TECNICAL DATA

- Motor(s) and type . . . . . One DC x Two (Two Mecha)
- Number of heads . . . . . Deck A One
  Deck B Two (R/P And E)
- Frequency range (3 dB limits ~ no Dolby)
  Type IV (Metal) tape . . . . . 40 Hz to 17 kHz
  Type II (CrO_2) tape . . . . . 40 Hz to 17 kHz
  Type I (Fe/Normal) tape . . . . . 40 Hz to 16 kHz
- Signal to noise ratio (CrO_2 type at 1 kHz)
  (no Dolby/Dolby B/C) . . . . . 55/65/70 dB
- Wow and flutter (RMS weighted) 0.08%
- Output level/impedance . . . . . 500 mV/3 kohms
- Headphone output . . . . . Yes

GENERAL

- Power Requirements . . . . . 120 V AC, 60 Hz
- Power Consumption 17W
- Dimensions
  Panel Width . . . . . 16-1/2 inches (420 mm)
  Panel Height . . . . . 4-5/8 inches (118 mm)
  Depth . . . . . 11 inches (280 mm)
- Weight (unit alone) . . . . . 11.3 lbs (5.1 kg)

Specifications subject to change without prior notice.

3. BLOCK DIAGRAM

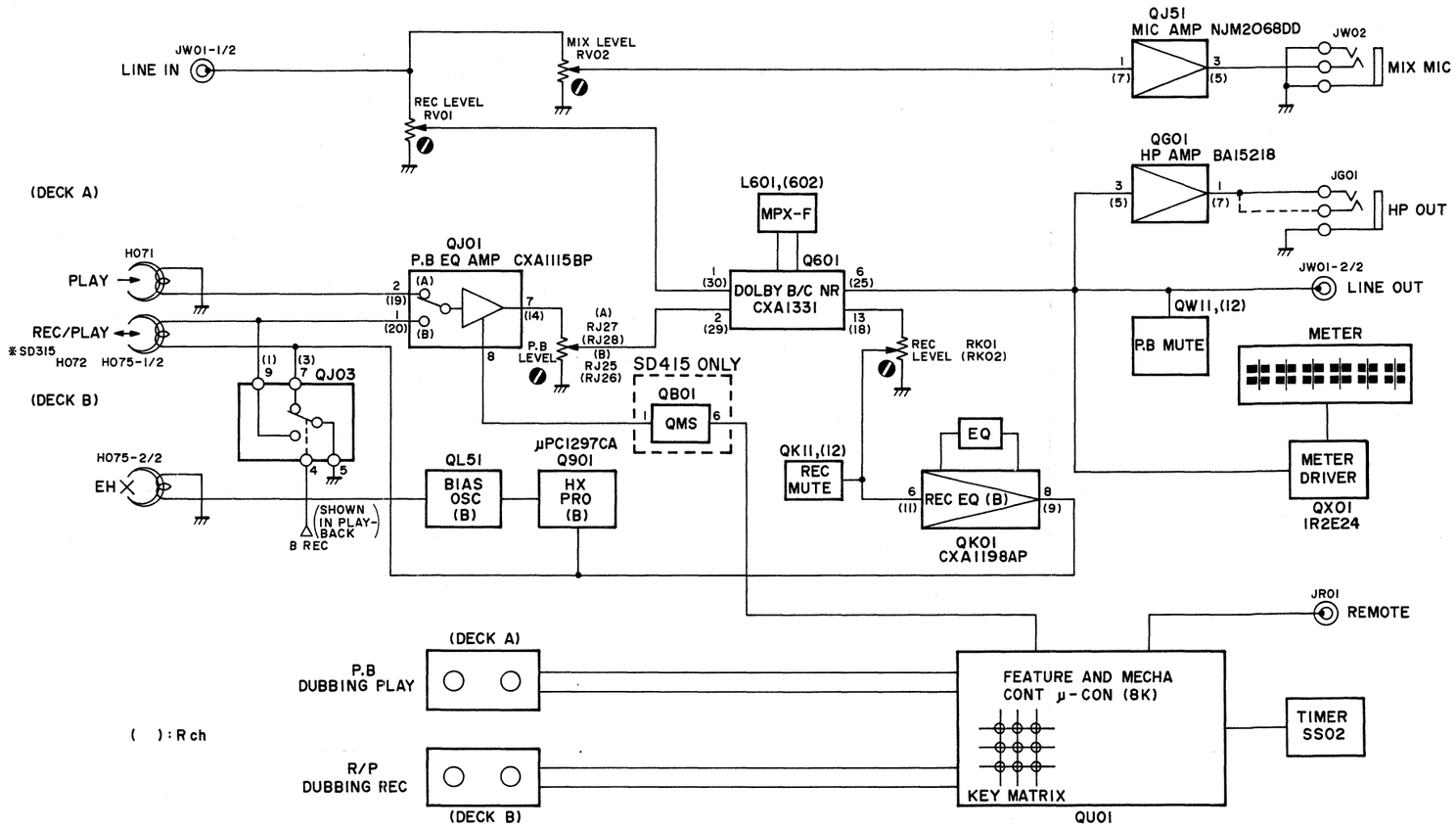

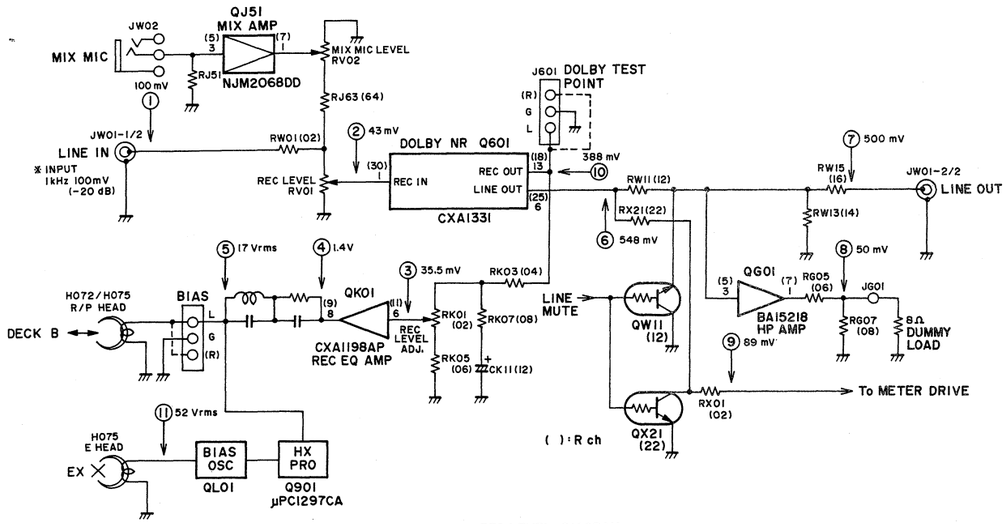

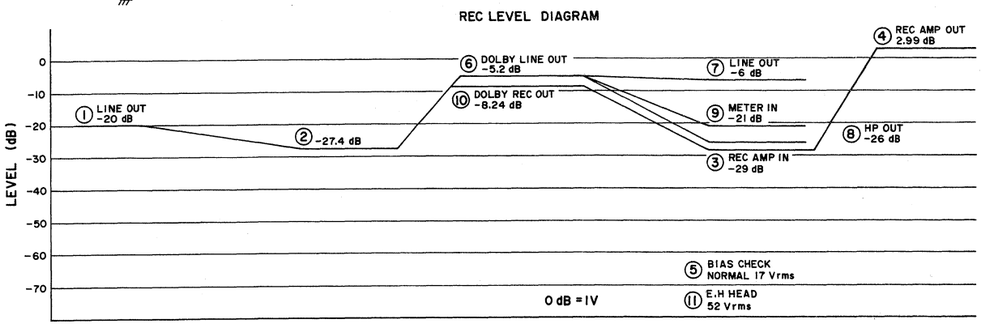

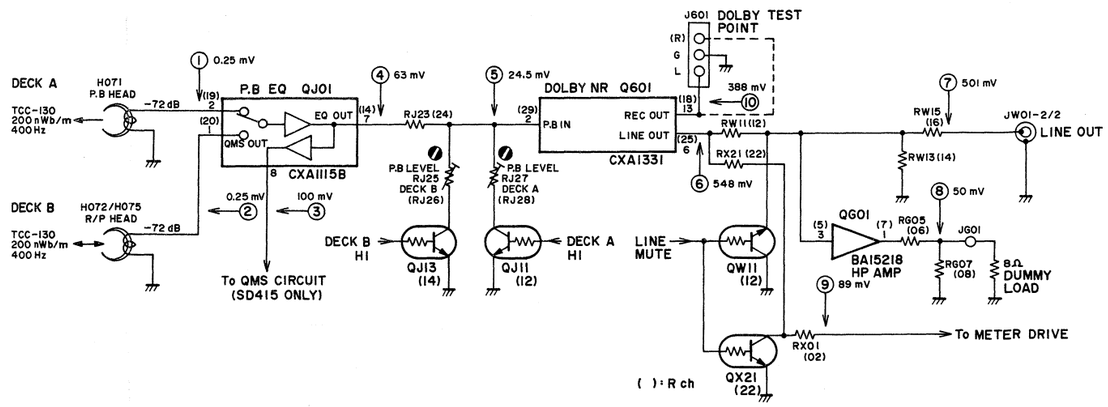

PLAYBACK LEVEL DIAGRAM

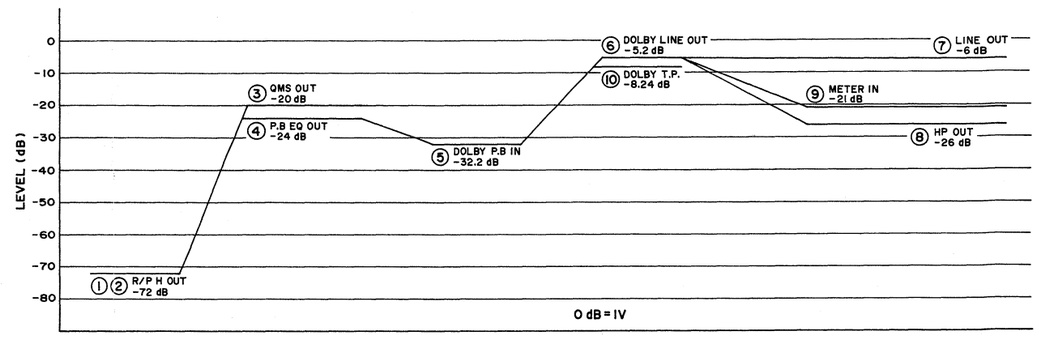

4. CONECTION DIAGRAM

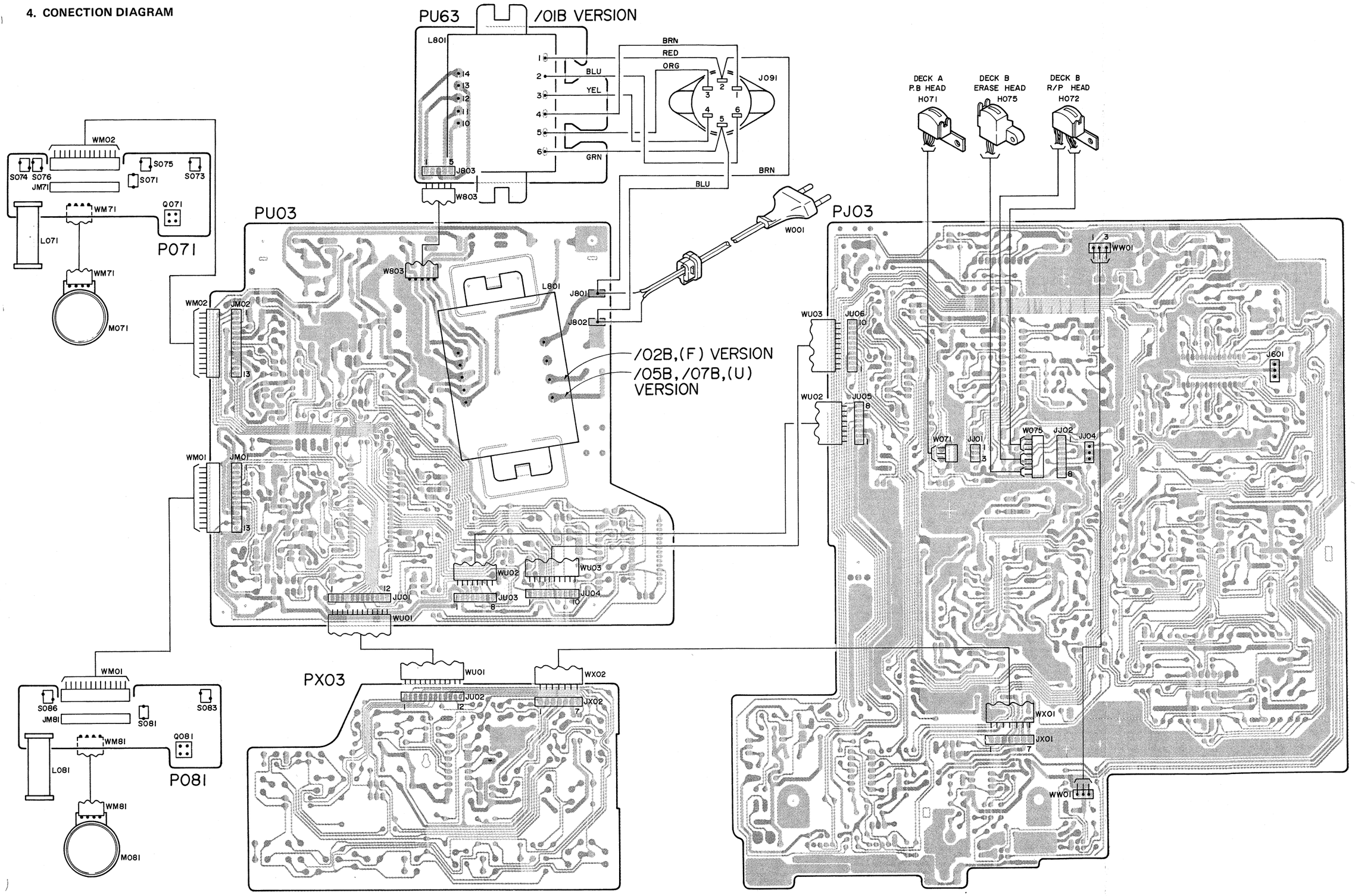

5. SCHEMATIC DIAGRAM AND PARTS LOCATION(pattern side)

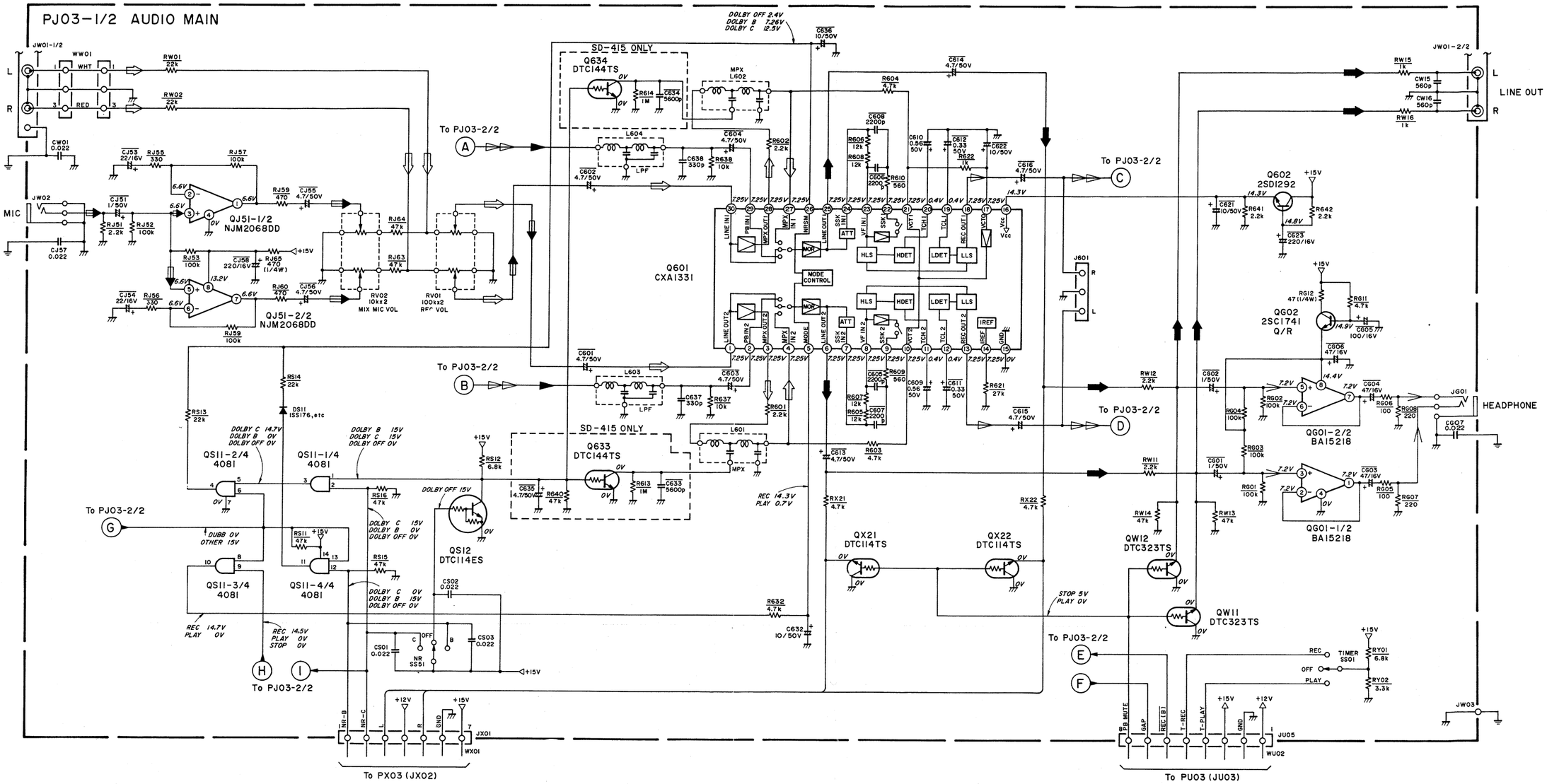

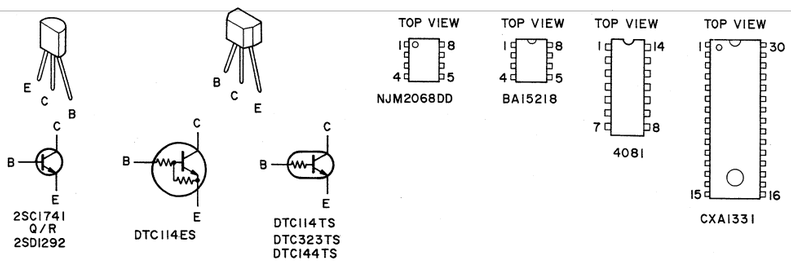

NOTE:

- REC OUT SIGNAL LINE
- PB IN SIGNAL LINE
- DUBBING SIGNAL LINE
- REC IN SIGNAL LINE
- MONITOR OUT SIGNAL LINE
- HP MONITOR SIGNAL LINE
- (MIC MIX) REC IN SIGNAL LINE

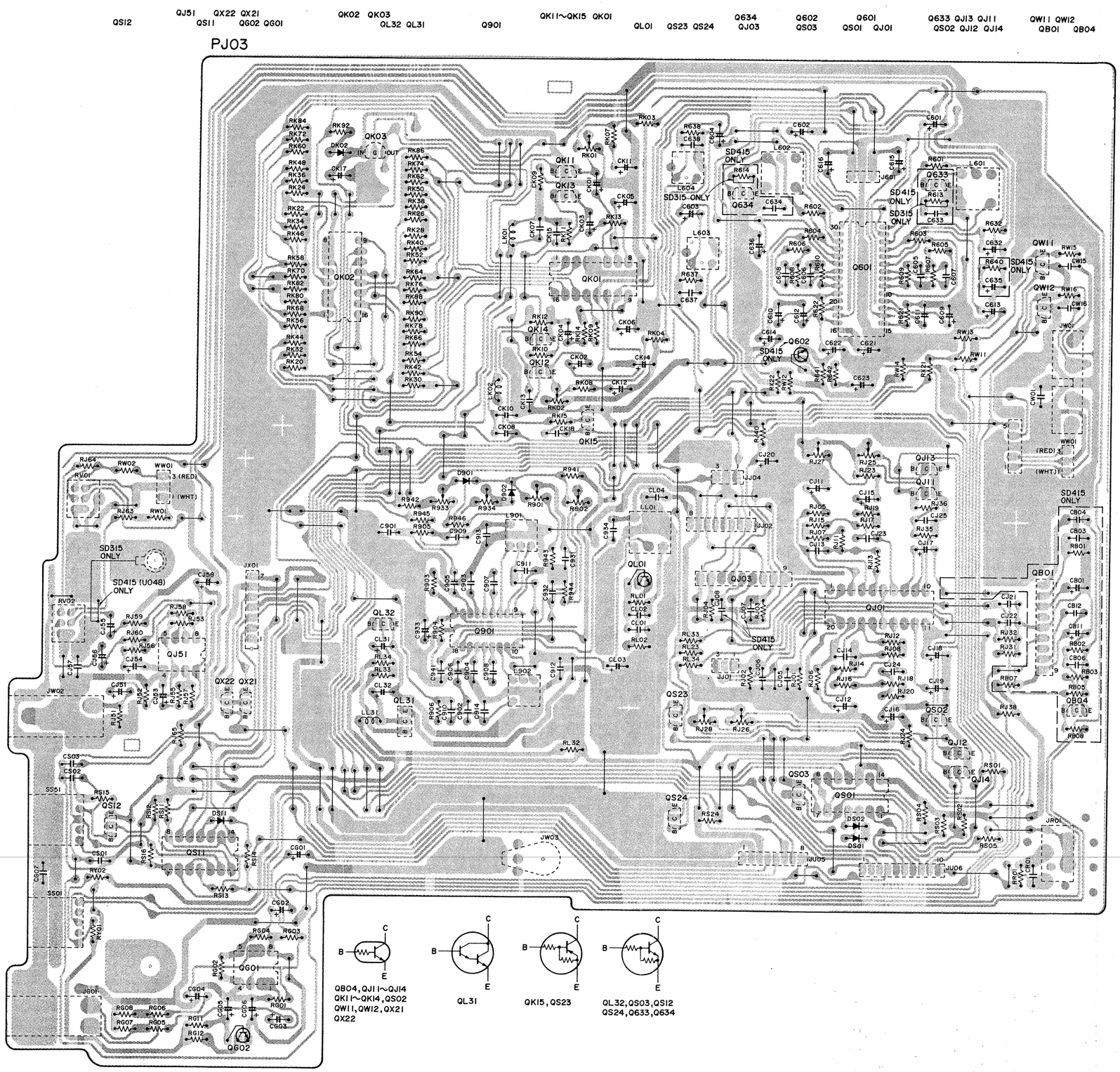
QS12
QJ51 QX22 QX21
QS11 Q602 Q601
QK02 QK03
QL32 QL31
Q901
QK11~QK15 QK01
QL01 QS23 QS24
Q634
QJ03
Q602
QS03
Q601
QS01 QJ01
Q633 QJ13 QJ11
QS02 QJ12 QJ14
QW11 QW12
QB01 QB04
PJ03
SD315 ONLY
SD415 (U048) ONLY
SD415 ONLY
SD315-ONLY
QB04, QJ11~QJ14
QK11~QK14, QS02
QW11, QW12, QX21
QX22
QL31
QK15, QS23
QL32, QS03, QS12
QS24, Q633, Q634

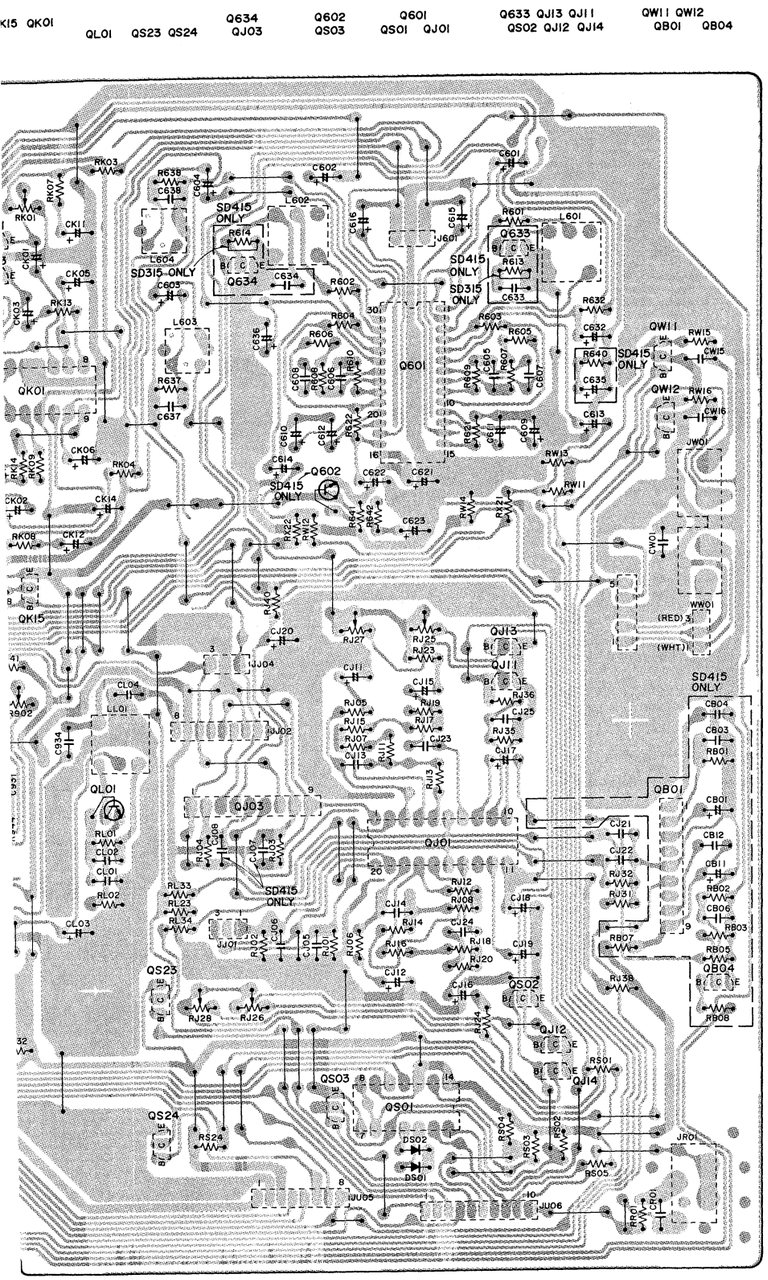

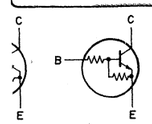

QL32,QS03,QS12
QS24,Q633,Q634

6. MICRO-PROCESSOR I/O PINS AND THEIR FUNCTIONS

SYM NO. QU01 TYPE NO. μPD75004CU-036

Pin No.	Port Name		I/O	Act	Function	Pin No.	Port Name		I/O	Act	Function
1	XT1		–	–		22	P23	H-DUBB	O	H	Hi-Speed Dubbing
2	XT2		–	–		23	P22	N-DUBB	O	H	N-Speed Dubbing
3	$\overline{\text{RESET}}$		I	L	Reset	24	P21	B-MOTOR	O	H	Motor Control Mecha B
4	X1			–	Main Clock	25	P20	A-MOTOR	O	H	Motor Control Mecha A
5	X2			–	Main Clock	26	P73	KR0	I	L	Matrix Signal, In
6	P33	O-Bias	O	H	Bias Control	27	P72	KR1	I	L	
7	P32	O-A/B	O	L	Play Back A/B Select Output, "Lo"=A	28	P71	KR2	I	L	
8	P31	REC MUTE	O	L	Rec Mute	29	P70	KR3	I	L	
9	P30	LINE MUTE	O	L	Line Mute	30	P63	KR4	I	L	
10	P81	O-REC 1	O	L	Rec Out 1	31	NC	NC	–	–	
11	P80	O-REC 2	O	L	Rec Out 2	32	P61	TAPE-A	I	L	Tape In, Mecha A
12	P3	ANT-REC	I	H	Anti Rec, Mecha B	33	P60	P.F.R SW-A	O	L	PLAY, FF. REW SW, Mecha A
13	P2	P.F.R SW-B	I	L	Mecha B	34	P53	ST3	O	L	Key Matrix Signal Out
14	P1	TAPE-B	I	L	Tape In, Mecha B	35	P52	ST2	O	L	
15	P0	AC-IN	I	–	AC Senser	36	P51	ST1	O	L	
16	NC	NC	–	–		37	P50	ST0	O	L	
17	P12	A-REEL	I	–	Reel Pulse Mecha A	38	P43	LED1	O	H	LED Matrix Signal Out
18	P11	B-REEL	I	–	Reel Pulse Mecha B	39	P42	LED0	O	H	LED Matrix Signal Out
19	P10	REMOTE	I	L	Remote Control	40	P41	SOL-B	O	L	Solenoid Drive B
20	NC	NC	–	–	–	41	P40	SOL-A	O	L	Solenoid Drive A
21	VCC	VCC	–	–	Power Supply 5V	42	VSS	VSS	–	–	GND

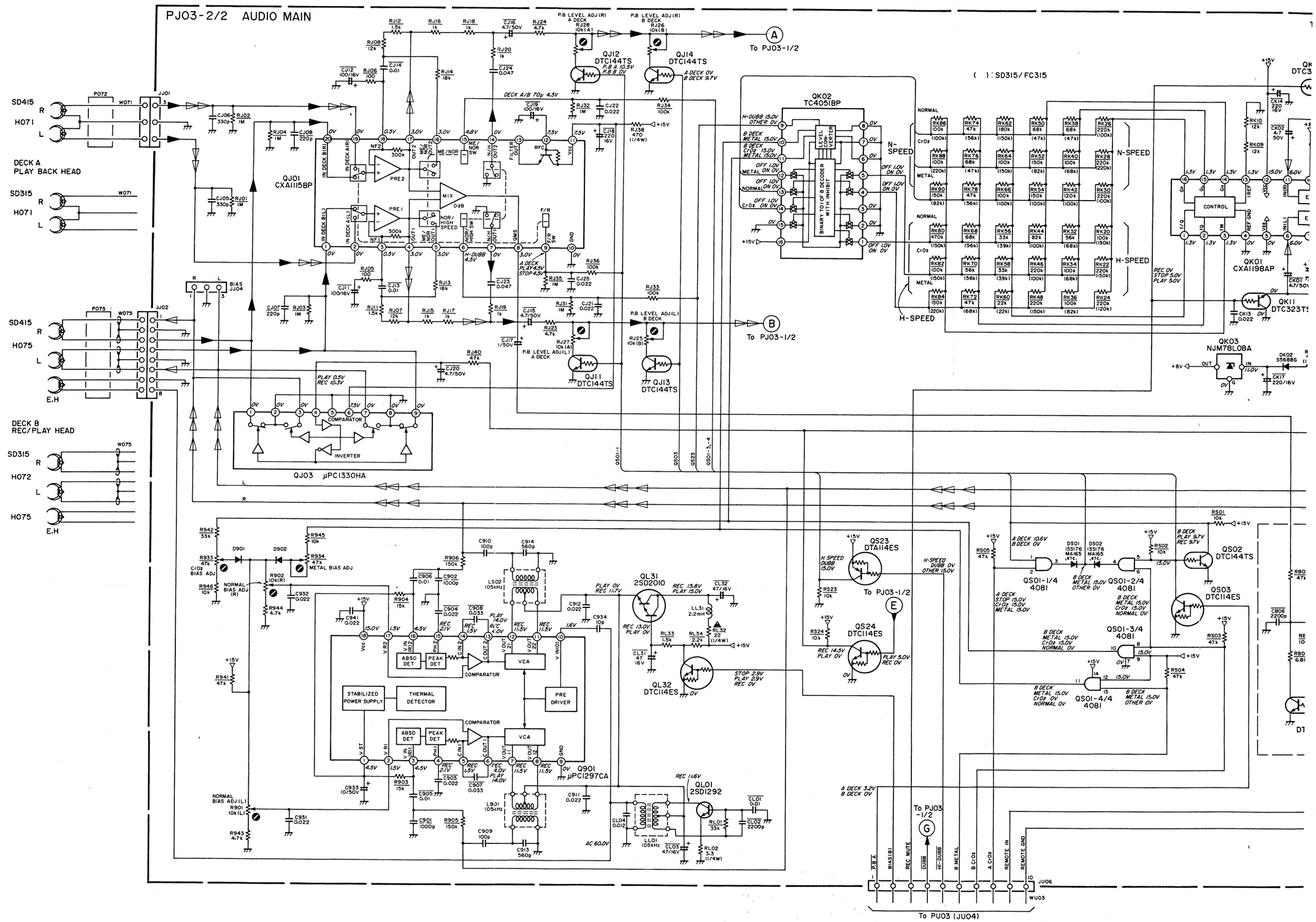
PJ03-2/2 AUDIO MAIN
DECK A PLAY BACK HEAD
DECK B REC/PLAY HEAD
QJ01 CXA1115BP
QJ03 μPC1330HA
QK02 TC4051BP
QK01 CXA1198AP
QK03 NJM78L08A
Q901 μPC1297CA
QL31 2SD2010
QL32 DTC114ES
QL01 2SD1292
QS23 DTA114ES
QS24 DTC114ES
QS02 DTC144TS
QS03 DTC114ES
To PJ03-1/2
To PJ03 -1/2
To PJ03 (JJ04)
( ): SD315/FC315
N-SPEED
H-SPEED
CONTROL
COMPARATOR
INVERTER
VCA
PRE DRIVER
STABILIZED POWER SUPPLY
THERMAL DETECTOR
ABSO DET
PEAK DET
NORMAL BIAS ADJ (R)
NORMAL BIAS ADJ (L)
CrO2 BIAS ADJ
METAL BIAS ADJ

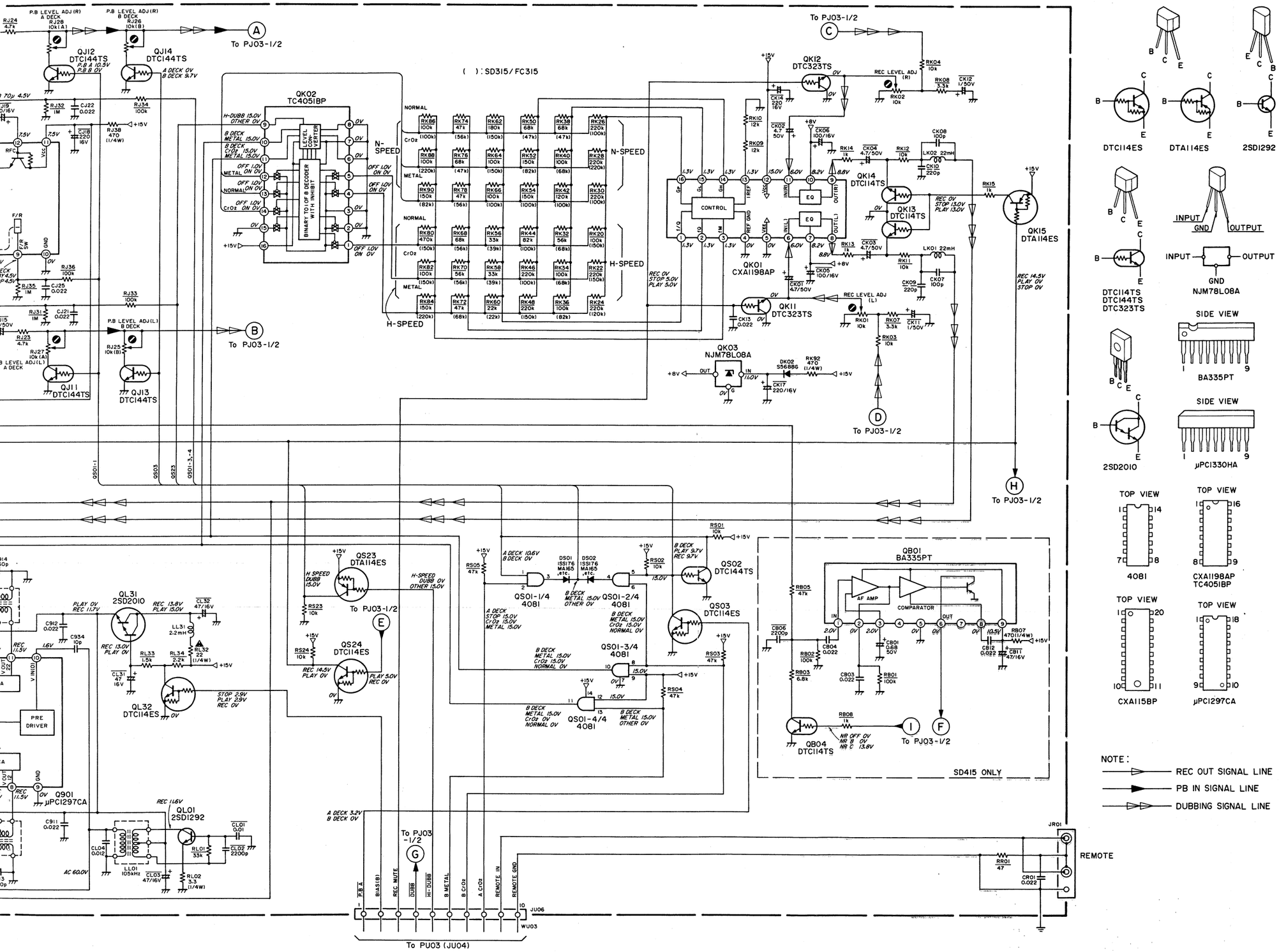

NOTE:

- REC OUT SIGNAL LINE
- PB IN SIGNAL LINE
- DUBBING SIGNAL LINE

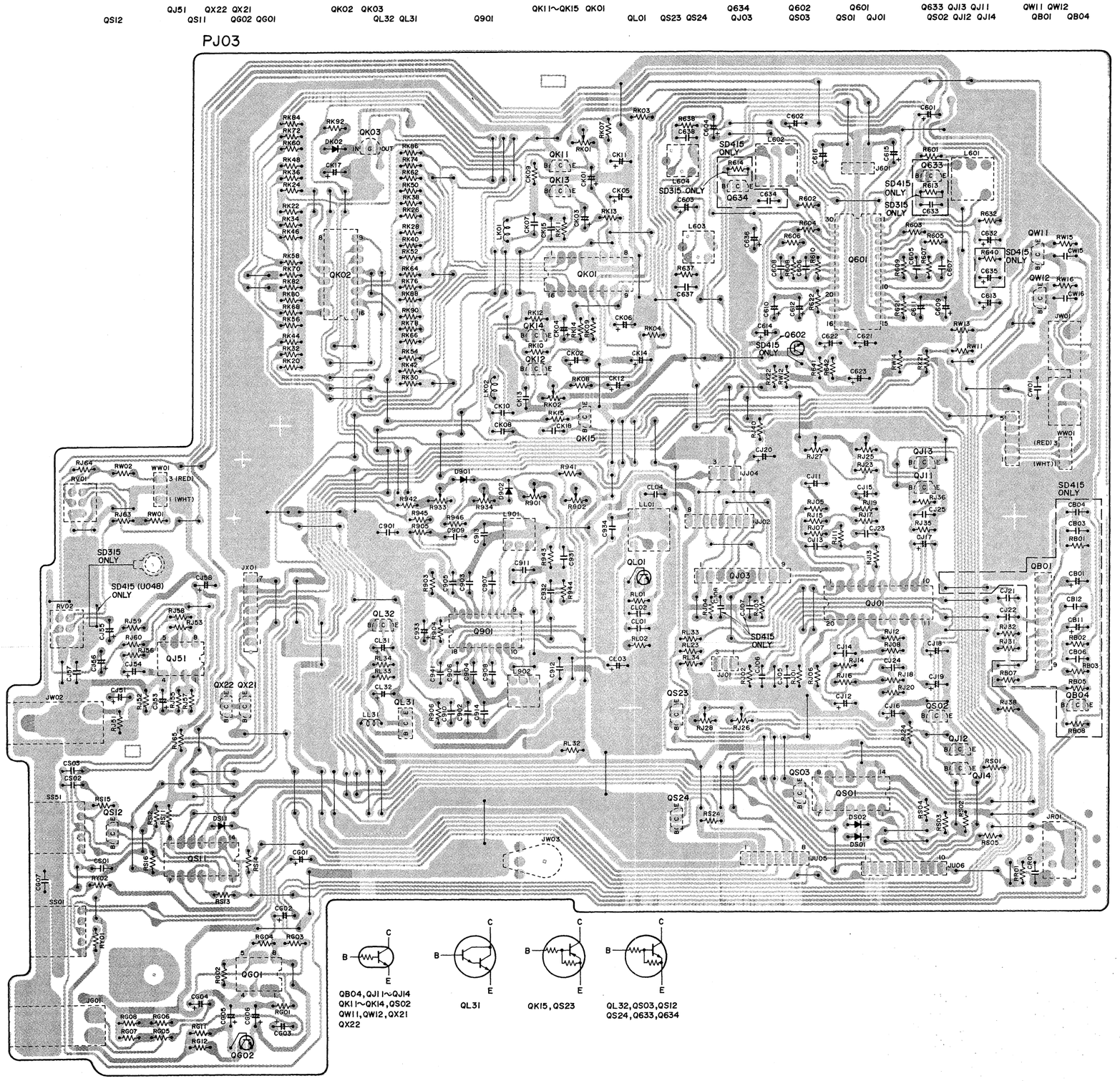
QS12
QJ51 QX22 QX21
QS11 QG02 QG01
QK02 QK03
QL32 QL31
Q901
QK11~QK15 QK01
QL01 QS23 QS24
Q634
QJ03
Q602
QS03
Q601
QS01 QJ01
Q633 QJ13 QJ11
QS02 QJ12 QJ14
QW11 QW12
QB01 QB04
PJ03
SD415 ONLY
SD315 ONLY
SD415 (U048) ONLY
QB04, QJ11~QJ14
QK11~QK14, QS02
QW11, QW12, QX21
QX22
QL31
QK15, QS23
QL32, QS03, QS12
QS24, Q633, Q634

QR21 QR01 QR22 QR23 QU04 QU05 QU15 QU02 QU14 QU12 QU13 QU54 Q801 QU07 QU06 Q802 QU01 QU03 QM51~QM56 QU08~QU11 QM01~QM08

PU03

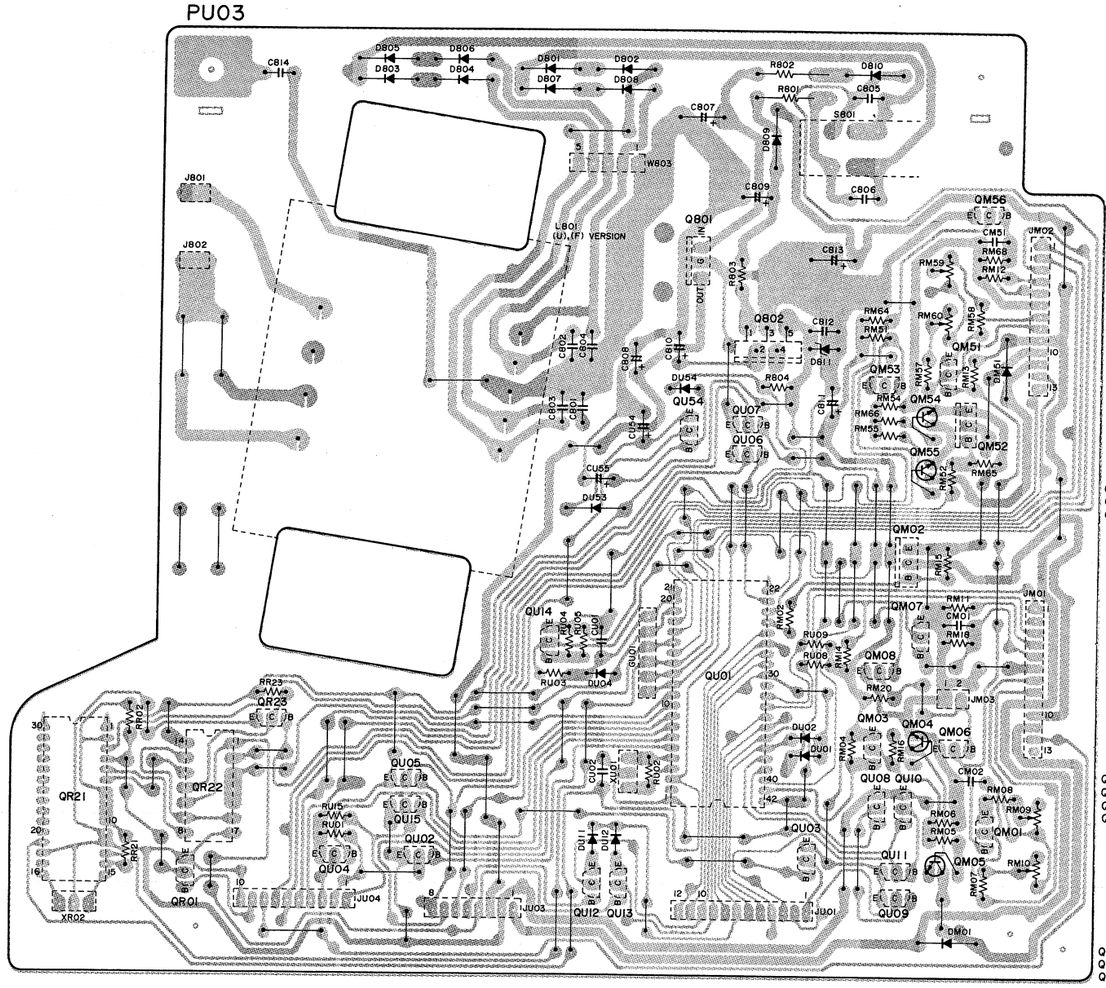

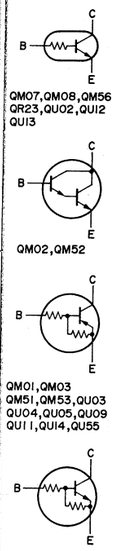

PU63

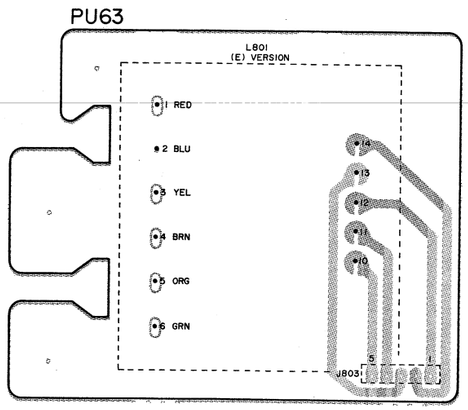

QY02 QY01 QX01

PX03

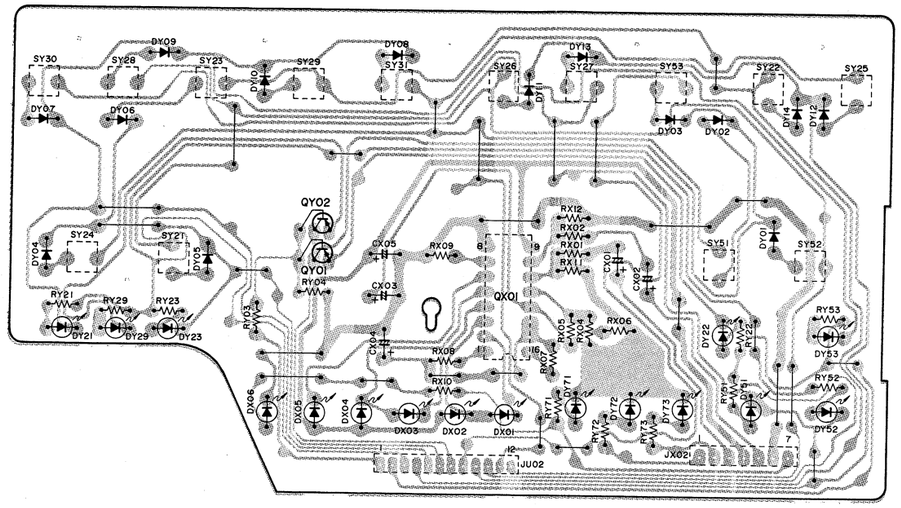

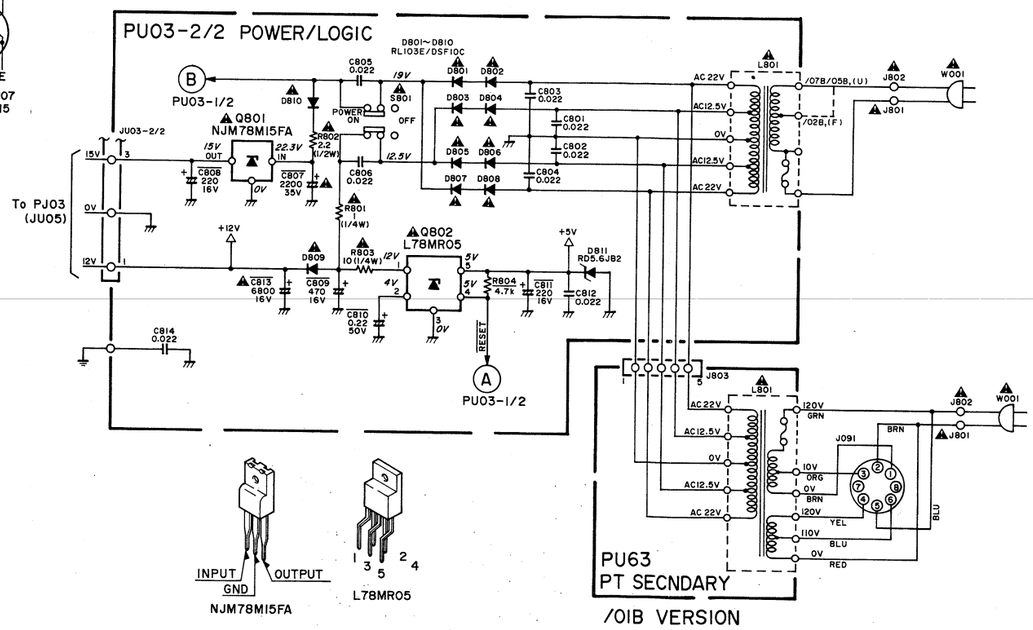

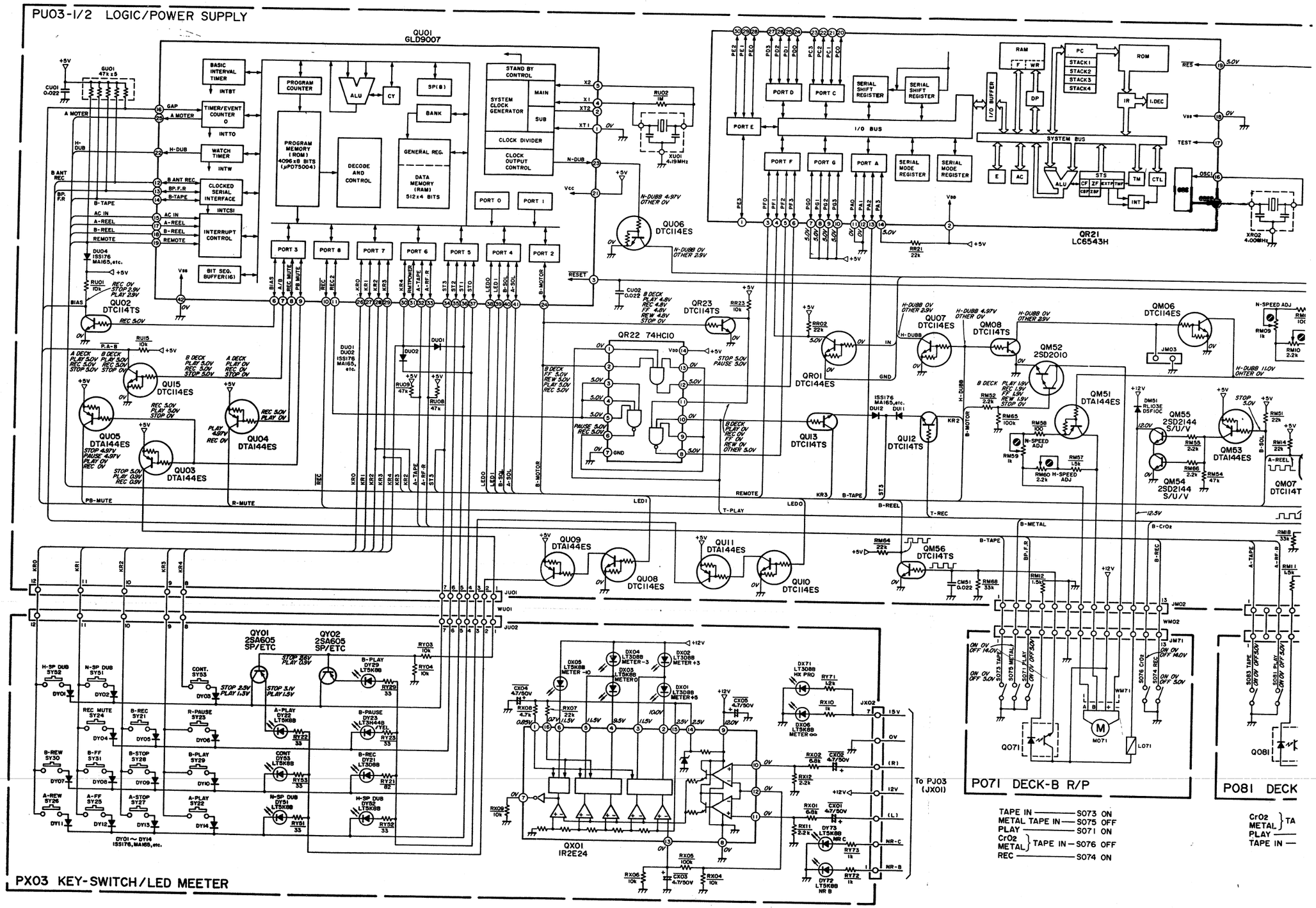
PU03-1/2 LOGIC/POWER SUPPLY
QU01 GLD9007
BASIC INTERVAL TIMER
TIMER/EVENT COUNTER 0
WATCH TIMER
CLOCKED SERIAL INTERFACE
INTERRUPT CONTROL
BIT SEQ. BUFFER(16)
PROGRAM COUNTER
ALU
CY
SP(8)
BANK
PROGRAM MEMORY (ROM) 4096 x 8 BITS (μPD75004)
DECODE AND CONTROL
GENERAL REG.
DATA MEMORY (RAM) 512 x 4 BITS
STAND BY CONTROL
SYSTEM CLOCK GENERATOR
MAIN
SUB
CLOCK DIVIDER
CLOCK OUTPUT CONTROL
PORT 0
PORT 1
PORT 2
PORT 3
PORT 4
PORT 5
PORT 6
PORT 7
PORT 8
PORT D
PORT C
PORT E
PORT F
PORT G
PORT A
SERIAL SHIFT REGISTER
SERIAL MODE REGISTER
I/O BUS
I/O BUFFER
RAM
ROM
PC
STACK1
STACK2
STACK3
STACK4
IR
I.DEC
DP
SYSTEM BUS
STS
TM
CTL
INT
QR21 LC6543H
QU06 DTC114ES
QR23 DTC114TS
QR22 74HC10
QR01 DTC144ES
QU07 DTC114ES
QM08 DTC114TS
QM52 2SD2010
QM06 DTC114ES
QU05 DTA144ES
QU03 DTA144ES
QU04 DTA144ES
QU02 DTC114TS
QU15 DTC114ES
QU13 DTC114TS
QU12 DTC114TS
QM51 DTA144ES
QM55 2SD2144 S/U/V
QM53 DTA144ES
QM54 2SD2144 S/U/V
QU09 DTA144ES
QU08 DTC114ES
QU11 DTA144ES
QU10 DTC114ES
QM56 DTC114TS
QY01 2SA605 SP/ETC
QY02 2SA605 SP/ETC
QX01 IR2E24
To PJ03 (JX01)
P071 DECK-B R/P
P081 DECK
TAPE IN — S073 ON
METAL TAPE IN — S075 OFF
PLAY — S071 ON
CrO2 METAL TAPE IN — S076 OFF
REC — S074 ON
PX03 KEY-SWITCH/LED METER

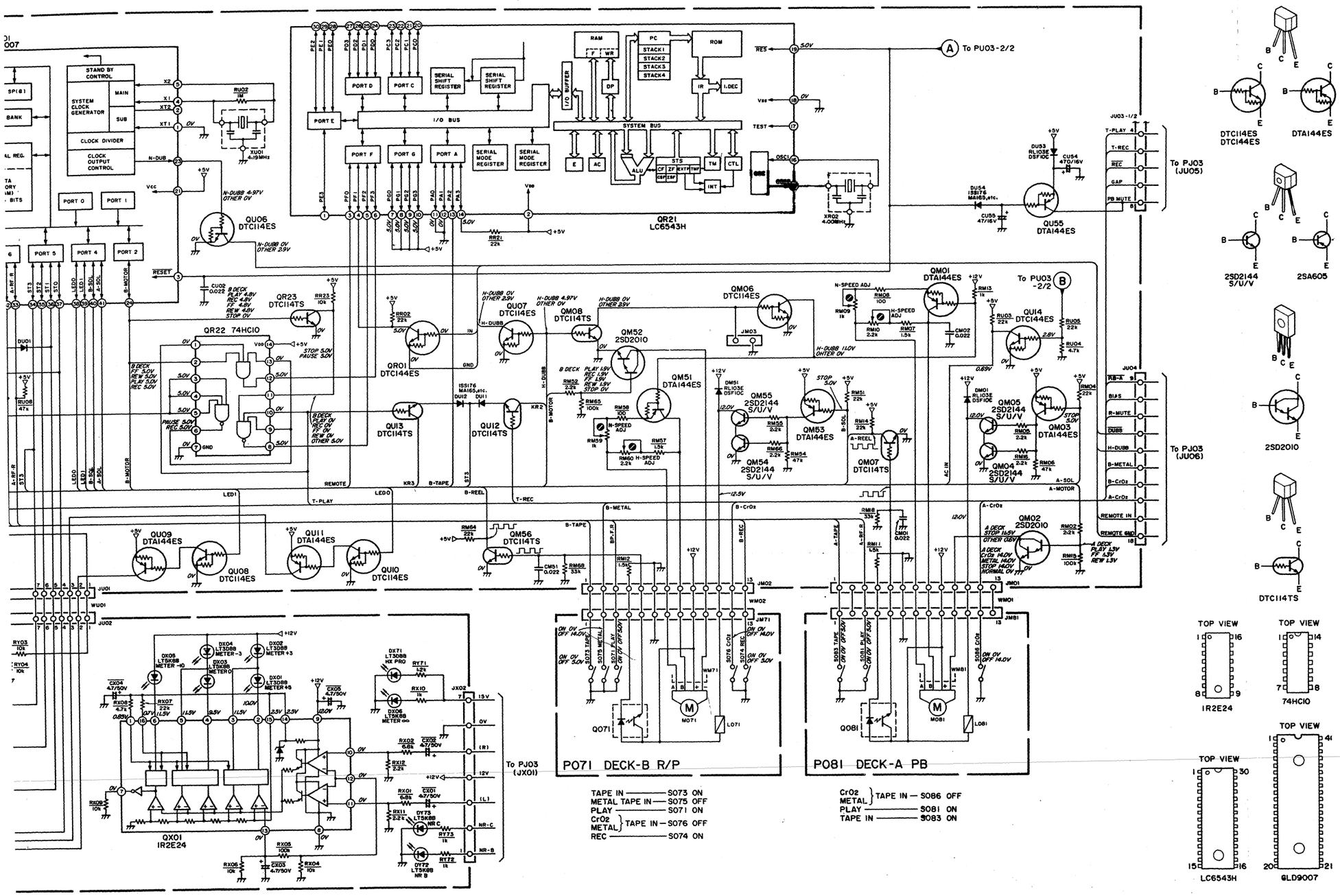
QR21
LC6543H
QR22 74HC10
QX01
IR2E24
P071 DECK-B R/P
P081 DECK-A PB
To PU03-2/2
To PU03-2/2
To PJ03 (JU05)
To PJ03 (JU06)
To PJ03 (JX01)
TAPE IN — S073 ON
METAL TAPE IN — S075 OFF
PLAY — S071 ON
CrO2 METAL } TAPE IN — S076 OFF
REC — S074 ON
CrO2 METAL } TAPE IN — S086 OFF
PLAY — S081 ON
TAPE IN — S083 ON

DTC114ES
DTC144ES
2SD2144 S/U/V
2SA605
2SD2010
DTC114TS
TOP VIEW
IR2E24
TOP VIEW
74HC10
TOP VIEW
LC6543H
TOP VIEW
GLD9007

7. EXPLODED VIEW AND PARTS LIST

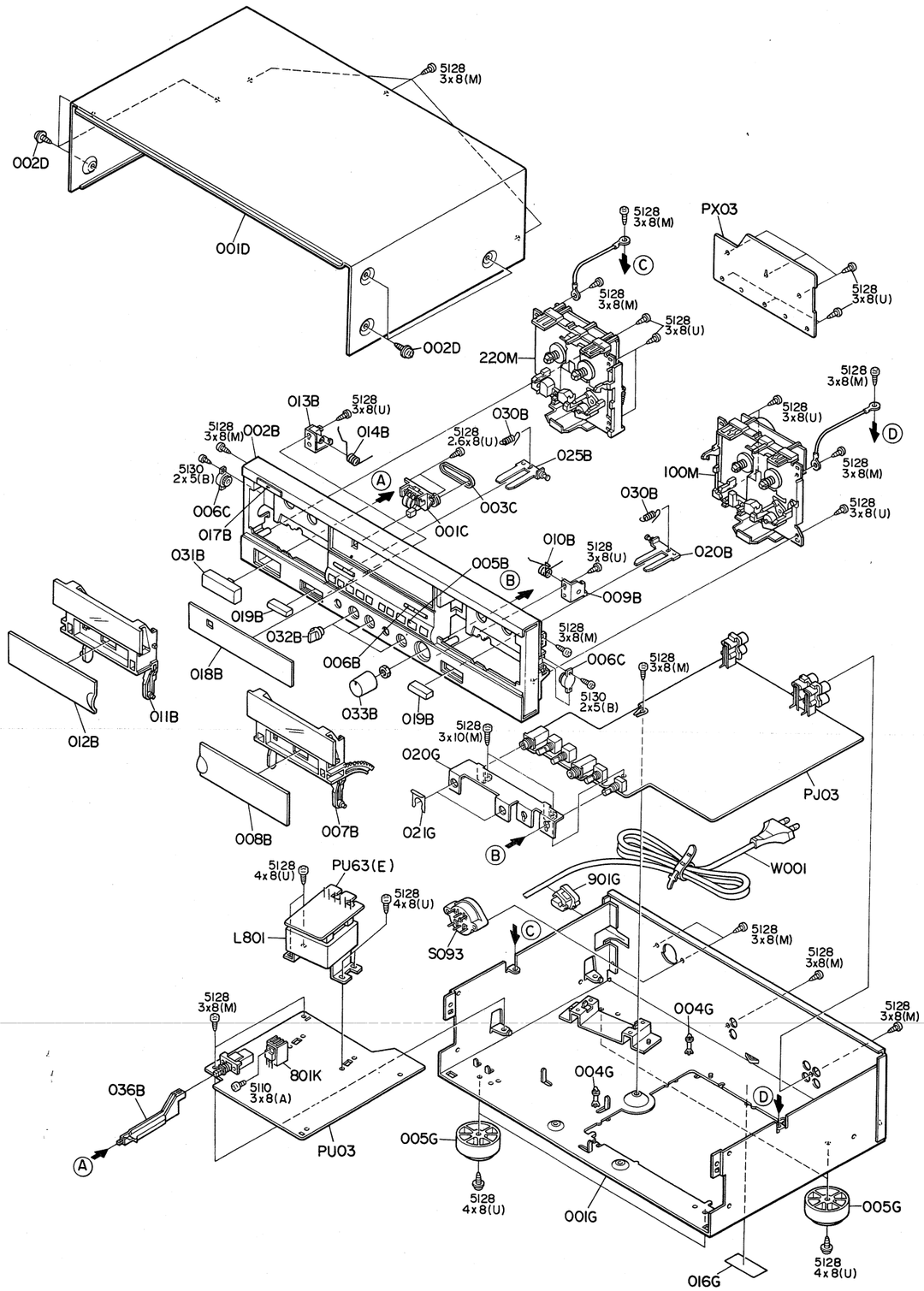

REF. DESIG.	PART NO.	DESCRIPTION
002B	4822 443 40959	Front Panel /01B/02B/07B
	4822 443 40976	Front Panel [U]
005B	4822 410 60904	Button, Mecha /01B/02B/07B
	4822 410 60996	Button, Mecha [U]
007B	4822 256 91704	Holder, Cassette (A) /01B/02B/07B
	4822 256 91706	Holder, Cassette (A) [U]
008B	4822 443 63135	Cover, Cassette (A) /01B/02B/07B
	4822 443 63199	Cover, Cassette (A) [U]
009B	4822 403 70137	Bracket, Holder (A)
010B	4822 492 70734	Spring, Open (A)
011B	4822 256 91705	Holder, Cassette (B)
012B	4822 443 63136	Cover, Cassette (B) /01B/02B/07B
	4822 443 63201	Cover, Cassette (B) [U]
013B	4822 403 70138	Bracket, Holder (B)
014B	4822 492 70735	Spring, Open (B)
017B	4822 454 40107	Badge, PHILIPS [U]
	4822 459 10943	Badge, MARANTZ /01B/02B/07B
018B	4822 459 80707	Escutcheon, Front /01B/02B/07B
	4822 459 80713	Escutcheon, Front [U]
019B	4822 410 60903	Button, Eject
020B	4822 417 11125	Joint, Eject
025B	4822 417 11126	Joint, Eject
030B	4822 492 70733	Spring, Eject
031B	4822 410 60902	Button, Power
032B	4822 410 60873	Knob, Timer/Dolby/Mix
033B	4822 413 41589	Knob, Rec Level
036B	4822 403 70136	Link, Power Switch
001C	4822 349 50345	Counter, Tape
003C	4822 358 31087	Belt, Counter
006C	4822 466 92936	Damper
002D	4822 501 11008	B.T. Screw (w/w) B4 x 8
005G	4822 462 41477	Leg
901G	4822 532 60948	Bushing, AC Cord
001T	4822 736 20994	User Manual [U]
	4822 736 20863	User Manual /01B/02B/07B
▲L801	4822 146 21571	Power Transformer /02B/07B
	4822 146 21572	Power Transformer /01B
	4822 146 21581	Power Transformer [U]
▲S093	4822 272 10227	Voltage Selector /01B

8. TEST EQUIPMENT REQUIRED FOR SERVICING

For measuring or checking your Cassette Deck, the following instruments and materials are necessary.

- Audio Oscillator (AF OSC)
- Attenuator (600Ω)
- VTVM
- Oscilloscope
- Wow and Flutter Meter
- Torque Meter (Cassette Type)
- Digital Frequency Counter
- Black Tapes (Completely erased with bulk eraser)
  AC224 (Normal)
  AC513 (CrO_2)
  AC-712 (Metal)

NOTE:
If any doubt is noted in a measured value, use new tape.

- Test Tape

TCC-112·MTT-111	Wow and Flutter, Tape Speed
TCC-120·MTT-212	Signal-to-Noise Ratio
TCC-130·MTT-150	Level Adjustment
TCC-161·MTT-256	Frequency Response (for Normal)
TCC-261·MTT-356	Frequency Response (for CrO_2 and Metal)
TCC-192·MTT-121	Cross Talk
TCC-194·MTT-141	Channel Separation
TCC-174A·MTT-255M (A-BEX)·(TEAC)	Azimuth adjustment

- Mirror cassette 12 μm padless
  TCC-902·MTT-902 Tape travel check

9. DISASSEMBL

- **Removing the t**
  Remove the 9 s

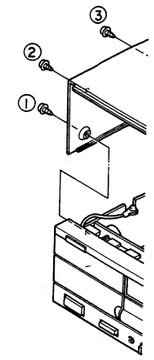

- **Removing the f**
  1) Remove the
  2) Remove the

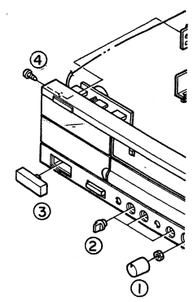

REF. DESIG.	PART NO.	DESCRIPTION
002B	4822 443 40959	Front Panel /01B/02B/07B
	4822 443 40976	Front Panel [U]
005B	4822 410 60904	Button, Mecha /01B/02B/07B
	4822 410 60996	Button, Mecha [U]
007B	4822 256 91704	Holder, Cassette (A) /01B/02B/07B
	4822 256 91706	Holder, Cassette (A) [U]
008B	4822 443 63135	Cover, Cassette (A) /01B/02B/07B
	4822 443 63199	Cover, Cassette (A) [U]
009B	4822 403 70137	Bracket, Holder (A)
010B	4822 492 70734	Spring, Open (A)
011B	4822 256 91705	Holder, Cassette (B)
012B	4822 443 63136	Cover, Cassette (B) /01B/02B/07B
	4822 443 63201	Cover, Cassette (B) [U]
013B	4822 403 70138	Bracket, Holder (B)
014B	4822 492 70735	Spring, Open (B)
017B	4822 454 40107	Badge, PHILIPS [U]
	4822 459 10943	Badge, MARANTZ /01B/02B/07B
018B	4822 459 80707	Escutcheon, Front /01B/02B/07B
	4822 459 80713	Escutcheon, Front [U]
019B	4822 410 60903	Button, Eject
020B	4822 417 11125	Joint, Eject
025B	4822 417 11126	Joint, Eject
030B	4822 492 70733	Spring, Eject
031B	4822 410 60902	Button, Power
032B	4822 410 60873	Knob, Timer/Dolby/Mix
033B	4822 413 41589	Knob, Rec Level
036B	4822 403 70136	Link, Power Switch
001C	4822 349 50345	Counter, Tape
003C	4822 358 31087	Belt, Counter
006C	4822 466 92936	Damper
002D	4822 501 11008	B.T. Screw (w/w) B4 x 8
005G	4822 462 41477	Leg
901G	4822 532 60948	Bushing, AC Cord
001T	4822 736 20994	User Manual [U]
	4822 736 20863	User Manual /01B/02B/07B
▲ L801	4822 146 21571	Power Transformer /02B/07B
	4822 146 21572	Power Transformer /01B
	4822 146 21581	Power Transformer [U]
▲ S093	4822 272 10227	Voltage Selector /01B

8. TEST EQUIPMENT REQUIRED FOR SERVICING

For measuring or checking your Cassette Deck, the following instruments and materials are necessary.

- Audio Oscillator (AF OSC)
- Attenuator (600Ω)
- VTVM
- Oscilloscope
- Wow and Flutter Meter
- Torque Meter (Cassette Type)
- Digital Frequency Counter
- Black Tapes (Completely erased with bulk eraser)
  AC224 (Normal)
  AC513 (CrO_2)
  AC-712 (Metal)

NOTE:
If any doubt is noted in a measured value, use new tape.

- Test Tape

TCC-112·MTT-111	Wow and Flutter, Tape Speed
TCC-120·MTT-212	Signal-to-Noise Ratio
TCC-130·MTT-150	Level Adjustment
TCC-161·MTT-256	Frequency Response (for Normal)
TCC-261·MTT-356	Frequency Response (for CrO_2 and Metal)
TCC-192·MTT-121	Cross Talk
TCC-194·MTT-141	Channel Separation
TCC-174A·MTT-255M (A-BEX)·(TEAC)	Azimuth adjustment

- Mirror cassette 12 μm padless
  TCC-902·MTT-902 Tape travel check

9. DISASSEMBLY

- **Removing the top cover.**
  Remove the 9 screws ① ~ ⑨.

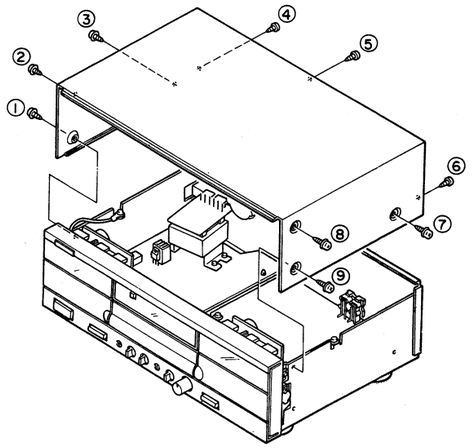

- **Removing the mechanism**
  Remove the 8 screws ① ~ ⑧.

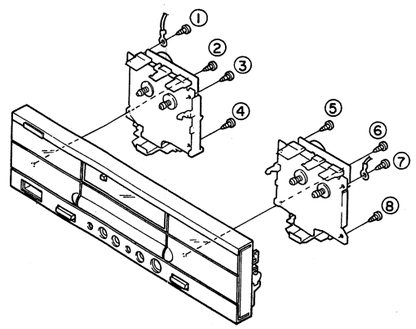

- **Removing the front panel**
  1) Remove the 4 screws ④ ~ ⑦.
  2) Remove the Button ③ and Knobs ①, ②.

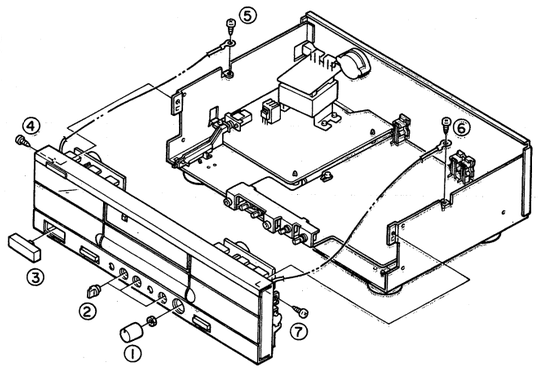

- **Removing the main P.W. board**
  1) Remove the 5 screws ① ~ ⑤.

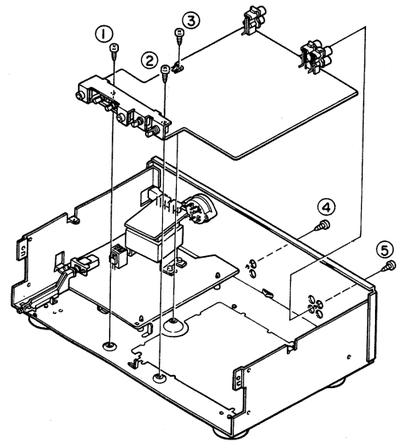

10. ELECTRICAL ADJUSTMENT

Precautions before Adjustment

1. Before playing the test tape back, thoroughly demagnetize the heads, capstan and similar metal parts using an eraser as the test tape-recorded tone is easily erased.
2. Do not place the test tape on any measuring instrument.
3. Do not put the test tape near a place where the eraser is used.
4. Method of Demagnetization: — Turn the eraser power switch on at a remote position far away from the heads. Bring the eraser close to the heads, capstan and other parts to be demagnetized. and move it up and down four or five times to demagnetize. Slowly separate the eraser far away from the parts, and turn the power switch off.
5. Tools to be used shall not be magnetized. It is recommended to demagnetize tools occasionally using a demagnetizer.
6. Do not turn semi-fixed resistor more than needed.
7. Do not apply locking bond excessively.

ADJUSTMENT POINT (Component Side)

PU03

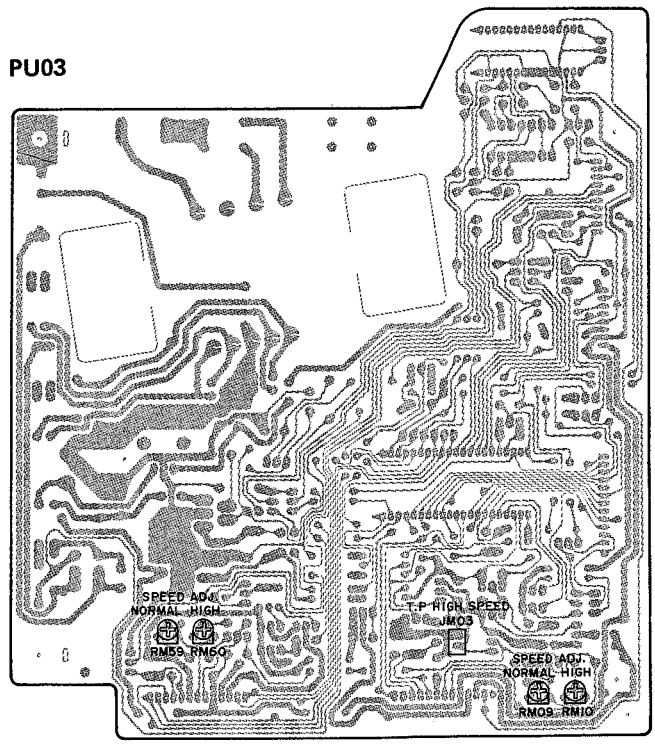

PJ03

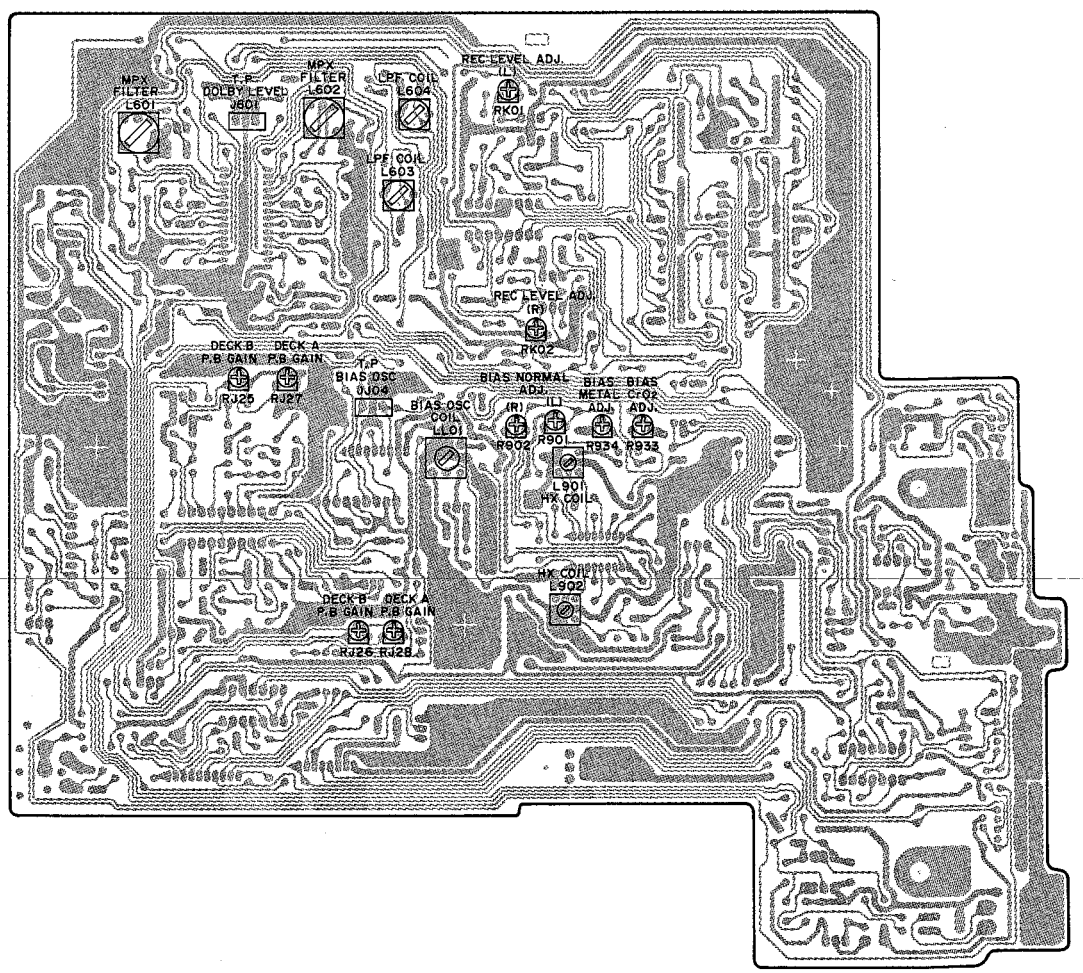

11. ELECTRICAL MEASUREMENTS AND ADJUSTMENTS

General conditions

The following general conditions apply to the electrical measurements and adjustments, unless explicity stated otherwise.

- Ambient temperature 20 to 25°C
- Dolby switch SS51 off
- The voltages have been measured relative to earth.
- The adjustment and measurement should be done for Deck A, as well as Deck B.

Adjustment	Cassette	Recorder in position	Apply signal to	Measure on	Read on	Adjust with	Value
Playback speed	TCC-112 MTT-111	PLAY Deck A High speed *a		JW01 (Line out)	Frequency Counter	RM10	5980 Hz ≀ 6020 Hz
		PLAY Deck A Normal speed				RM09	2990 Hz ≀ 3010 Hz
		PLAY Deck B High speed *a				RM60	5980 Hz ≀ 6020 Hz
		PLAY Deck B Normal speed				RM59	2990 Hz ≀ 3010 Hz
Head azimuth	TCC-174A MTT-255M	PLAY		JW01 (Line out)	VTVM	Head azimuth adjust screw *b	Max.
Playback output	TCC-130 MTT-150	PLAY *h		J601	mV-meter	Deck A RJ27 (L) RJ28 (R) Deck B RJ25 (L) RJ26 (R)	387.5 mV
Recording playback level	AC224	REC+PLAY	1 kHz 100 mV JW01 (Line in)	J601	mV-meter	RV01 *h	387.5 mV
		PLAY		J601	mV-meter	Deck B RK01 (L) RK02 (R)	387.5 mV
	AC-712 side 2 Metal cassette *c						
Recording playback frequency response	AC224 Normal cassette	REC+PLAY DOLBY-C	1 kHz 100 mV JW01 (Line in)	J601	mV-meter	RV01 *h	387.5 mV
			1 kHz, 10 kHz 100 mV−25 dB	–	–	–	–
		PLAY DOLBY-C		JW01 (Line out)	mV-meter	Deck B R901 (L) R902 (R)	Playback level differences of 1 kHz and 12.5 kHz is within 0±1.0 dB *d, e
		DOLBY-OFF *f					
		DOLBY-B *g					

Adjustment	Cassette	Recorder in position	Apply signal to	Measure on	Read on	Adjust with	Value
Recording playback frequency *response*	AC513 CrO_2 cassette	REC+PLAY DOLBY-C	1 kHz 100 mV JW01 (Line in)	J601	mV-meter	RV01 *h	387.5 mV
			1 kHz, 10 kHz 100 mV—25 dB	–	–	–	–
		PLAY DOLBY-C		JW01 (Line out)	mV-meter	Deck B R933	Playback level differences of 1 kHz and 12.5 kHz is within 0±1.0 dB *e
		DOLBY-OFF *f					
		DOLBY-B *g					
	Metal cassette	REC+PLAY DOLBY-C	1 kHz 100 mV JW01 (Line in)	J601	mV-meter	RV01 *h	387.5 mV
			1 kHz, 10 kHz 100 mV—25 dB	–	–	–	–
		PLAY DOLBY-C		JW01 (Line out)	mV-meter	Deck B R934	Playback level differences of 1 kHz and 12.5 kHz is within 0±1.0 dB *e
		DOLBY-OFF *f					
		DOLBY-B *g					

*a Prior to adjustment, please short-circuit the both terminals of JM03 then, it will be a high speed mode (9.5 cm/sec.).

*b
- Remove the cassette case and retainer as per the figure and adjust the head azimuth.
- If the peak level reads of the right and left channels are different, set the lower channel to maximum.
- Be sure to adjust with the same section on the same side of the tape of both Deck A and Deck B.
- After adjustment, be sure to lock the screws with bond.

*c Record/review the chromium cassette and metal cassette, then confirm the difference of evel at recording and reviewing to be within 1 dB respectively.

*d When 1 kHz level difference in DOLBY C mode is 1 dB or more compared to the monitor level, adjust Deck B RK01(L), RK02(R) for the recording level adjustment previously, so that the level difference is within 1 dB.

*e After adjustment, record 1 kHz, 10 kHz and 12.5 kHz signals, and check that the playback level differences of these frequencies are as given on the right hand.

*f
- Set the DOLBY switch to OFF, record 1 kHz, 10 kHz and 12.5 kHz signals, and check that the playback level differences of these frequencies are as given on the right hand.
- With the DOLBY switch OFF, check that the L/R channel balance for 10 kHz is less than 3 dB.

*g Set the dolby switch to B, record 1 kHz, 10 kHz and 12.5 kHz signals, and check that the playback level differences of these frequencies are as given on the right hand.

*h Set the MIC VOL (RV02) to the minimum position.

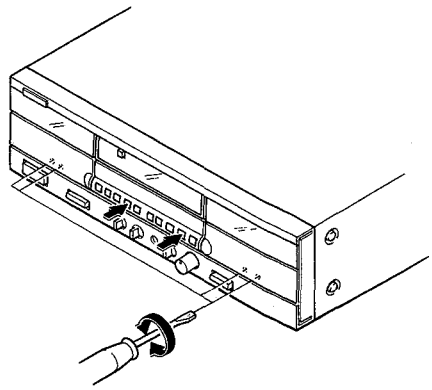

DOLBY-OFF (4.75 cm/sec)

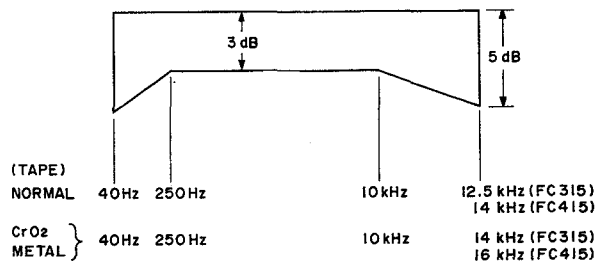

DOLBY-B, -C (4.75 cm/sec)

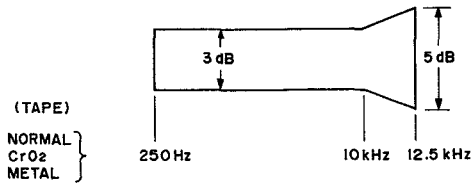

ASSIGNMENT OF COMMON PARTS CODES.

RESISTOR

R***: (1) GD05 --- 140, Carbon film fixed resistor, ±5%, 1/4W
R***: (2) GD05 --- 160, Carbon film fixed resistor, ±5%, 1/6W

① — Resistance value

Examples

① Resistance value

0.1Ω...001	10Ω...100	1kΩ...102	100kΩ...104
0.5Ω...005	18Ω...180	2.7kΩ...272	680kΩ...684
1Ω...010	100Ω...101	10kΩ...103	1MΩ...105
6.8Ω...068	390Ω...391	22kΩ...223	4.7MΩ...475

(Note) Please distinguish 1/4W from 1/6W by the shape of parts used actually.

C***: CERAMIC CAP.

(1) DD1 --- 370, Ceramic condenser
Disc type
Temp. coeff. P350 ~ N1000, 50V

①② — Capacity value
— Tolerance

Examples

① Tolerance (Capacity deviation)
±0.25pF...0
±0.5pF...1
±5%...5

* Tolerance of COMMON PARTS handled here are as follows:
0.5pF ~ 5pF...±0.25pF
6pF ~ 10pF...±0.5pF
12pF ~ 560pF...±5%

② Capacity value

0.5pF...005	3pF...030	100pF...101
1pF...010	10pF...100	220pF...221
1.5pF...015	47pF...470	560pF...561

C***: CERAMIC CAP.

(1) DK16 --- 300, *High dielectric constant ceramic condenser*
Disc type
Temp. chara. 2B4, 50V

① — Capacity value

Example

② Capacity value

100pF...101	1000pF...102	10000pF...103
470pF...471	2200pF...222	

C***: ELECTROLY CAP. (⧺), FILM CAP. (⧻)

(1) EA ------ 10, Electrolytic condenser
One-way lead type, Tolerance ±20%

①② — Dielectric strength
— Capacity value

Examples

① Capacity value

0.1μF...104	4.7μF...475	100μF...107
0.33μF...334	10μF...106	330μF...337
1μF...105	22μF...226	1100μF...108
		2200μF...228

② Working voltage

6.3V...006	25V...025
10V...010	35V...035
16V...016	50V...050

(2) DF15 --- 350, Plastic film condenser
One-way type, Mylar ±5% 50V

① — Capacity value

Examples

① Capacity value

0.001μF (1000pF)...102	0.1μF...104
0.0018μF.....182	0.56μF...564
0.01μF.....103	1μF...105
0.015μF.....153	

12. ELECTRICAL PARTS LIST

REF. DESIG.	PART NO.	DESCRIPTION			
		PJ03-MAIN CIRCUIT BOARD			
		PJ03-CAPACITORS			
CG07	4822 122 40491	Ceramic	0.022μF	+80% −20%	
CJ05	4822 126 10364	Ceramic	100pF	±10%	
CJ06	4822 126 10364	Ceramic	100pF	±10%	
CJ21	4822 122 40491	Ceramic	0.022μF	+80% −20%	
CJ22	4822 122 40491	Ceramic	0.022μF	+80% −20%	
CJ25	4822 122 40491	Ceramic	0.022μF	+80% −20%	
CJ57	4822 122 40491	Ceramic	0.022μF	+80% −20%	
CK07	4822 126 10734	Ceramic	100pF	±10%	
CK08	4822 126 10734	Ceramic	100pF	±10%	
CK09	4822 122 40464	Ceramic	220pF	±10%	
CK10	4822 122 40464	Ceramic	220pF	±10%	
CK13	4822 122 40491	Ceramic	0.022μF	+80% −20%	
CK15	4822 122 40522	Ceramic	220pF	±10%	
CK16	4822 122 40522	Ceramic	220pF	±10%	
CK18	4822 122 40491	Ceramic	0.022μF	+80% −20%	
CL04	4822 121 43774	Film	0.012μF	±10%	
CR01	4822 122 40491	Ceramic	0.022μF	+80% −20%	
CS01 ~ CS03	4822 122 40491	Ceramic	0.022μF	+80% −20%	
CW01	4822 122 40491	Ceramic	0.022μF	+80% −20%	
CW15	4822 126 10409	Ceramic	560pF	±10%	
CW16	4822 126 10409	Ceramic	560pF	±10%	
C609	4822 124 23445	Elect	0.56μF		50V
C610	4822 124 23445	Elect	0.56μF		50V
C637	4822 126 11071	Ceramic	330pF	±10%	
C638	4822 126 11071	Ceramic	330pF	±10%	
C909	4822 122 40522	Ceramic	220pF	±10%	
C910	4822 122 40522	Ceramic	220pF	±10%	
C911	4822 122 40491	Ceramic	0.022μF	+80% −20%	
C912	4822 122 40491	Ceramic	0.022μF	+80% −20%	
C913	4822 121 43775	Film	560pF	±10%	
C914	4822 121 43775	Film	560pF	±10%	
C931	4822 122 40491	Ceramic	0.022μF	+80% −20%	
C932	4822 122 40491	Ceramic	0.022μF	+80% −20%	
C934	4822 122 32185	Ceramic	10pF	±0.5pF	
C941	4822 122 40491	Ceramic	0.022μF	+80% −20%	
		PJ03-RESISTORS			
▲ RG12	4822 111 90731	47Ω	±2%	¼W, Fuse	
RJ25 ~ RJ28	4822 100 11351	10KΩ, Trimming			
RJ38	4822 050 24701	470Ω	±5%	¼W, Metal	
RJ65	4822 050 24701	470Ω	±5%	¼W, Metal	
RK01	4822 100 11351	10KΩ, Trimming			
RK02	4822 100 11351	10KΩ, Trimming			
RK92	4822 050 24701	470Ω	±5%	¼W, Metal	
RL02	4822 050 23308	3.3Ω	±5%	¼W, Metal	
▲ RL32	4822 113 90119	22Ω	±2%	¼W, Fuse	
RV01	4822 100 30143	100KΩx2, Volume			
RV02	4822 100 30142	10KΩx2, Volume			
▲ R642	4822 111 90731	47Ω	±2%	¼W, Fuse	
R901	4822 100 11351	10KΩ, Trimming			
R902	4822 100 11351	10KΩ, Trimming			
R933	4822 100 11372	47KΩ, Trimming			
R934	4822 100 11372	47KΩ, Trimming			

REF. DESIG.	PART NO.	DESCRIPTION
		PJ03-SEMICONDUCTORS
DK02	4822 130 80839	Diode S5688G
DS01	4822 130 33305	Diode 1SS176, etc.
DS02	4822 130 33305	Diode 1SS176, etc.
DS11	4822 130 33305	Diode 1SS176, etc.
D901	4822 130 33305	Diode 1SS176, etc.
D902	4822 130 33305	Diode 1SS176, etc.
QG01	4822 209 61187	IC BA15218
QG02	4822 130 43191	Transistor 2SC1741(Q, R)
QJ01	4822 209 62249	IC CXA1115BP
QJ03	4822 209 61667	IC μPC1330HA
QJ11 ~ QJ14	4822 130 61188	Transistor, Digital DTC144TS
QJ51	4822 209 73064	IC NJM2068DD
QK01	4822 209 62252	IC CXA1198AP
QK02	4822 209 62253	IC MC14051B
QK03	4822 209 80655	IC NJM78L08A
QK11	4822 130 61723	Transistor, Digital DTC323TS
QK12	4822 130 61723	Transistor, Digital DTC323TS
QK13	4822 130 61189	Transistor, Digital DTC114TS
QK14	4822 130 61189	Transistor, Digital DTC114TS
QK15	4822 130 61227	Transistor, Digital DTA114ES
QL01	4822 130 61886	Transistor 2SD1292(Q, R)
QL31	4822 130 61725	Transistor 2SD2010
QL32	4822 130 60588	Transistor, Digital DTC114ES
QS01	4822 209 82966	IC 4081
QS02	4822 130 61188	Transistor, Digital DTC144TS
QS03	4822 130 60588	Transistor, Digital DTC114ES
QS11	4822 209 82966	IC 4081
QS12	4822 130 60588	Transistor, Digital DTC114ES
QS23	4822 130 61227	Transistor, Digital DTA114ES
QS24	4822 130 60588	Transistor, Digital DTC114ES
QW11	4822 130 61723	Transistor, Digital DTC323TS
QW12	4822 130 61723	Transistor, Digital DTC323TS
QX21	4822 130 61189	Transistor, Digital DTC114TS
QX22	4822 130 61189	Transistor, Digital DTC114TS
Q601	4822 209 62251	IC CXA1331
Q901	4822 209 72874	IC μPC1297CA
		PJ03-MISCELLANEOUS
JG01	4822 267 31132	Jack, Headphone
JR01	4822 266 30274	Terminal, 2P RCA Pin
JW01	4822 265 30397	Terminal, 4P RCA Pin
JW02	4822 267 31132	Jack, Mix Mic
LK01	4822 157 53521	Choke Coil, 22mH
LK02	4822 157 53521	Choke Coil, 22mH
LL01	4822 148 81074	OSC Transformer, 105KHz
LL31	4822 152 20622	Choke Coil, 2.2mH
L601	4822 157 52461	MPX Coil
L602	4822 157 52461	MPX Coil
L603	4822 157 62214	MPX Coil, Low Filter
L604	4822 157 62214	MPX Coil, Low Filter
L901	4822 157 60436	OSC Transformer, 105KHz
L902	4822 157 60436	OSC Transformer, 105KHz
SS01	4822 273 10208	Rotary Switch, Timer
SS51	4822 273 10208	Rotary Switch, NR

REF. DESIG.	PART NO.	DESCRIPTION
		PU03-LOGIC/POWER SUPPLY CIRCUIT BOARD
		PU03-CAPACITORS
CM01	4822 122 40491	Ceramic 0.022μF +80% −20%
CM02	4822 122 40491	Ceramic 0.022μF +80% −20%
CM51	4822 122 40491	Ceramic 0.022μF +80% −20%
CU01	4822 122 40491	Ceramic 0.022μF +80% −20%
CU02	4822 122 40491	Ceramic 0.022μF +80% −20%
C801 ~ C806	4822 122 40491	Ceramic 0.022μF +80% −20%
C812	4822 122 40491	Ceramic 0.022μF +80% −20%
C814	4822 122 40491	Ceramic 0.022μF +80% −20%
		PU03-RESISTORS
RM09	4822 100 11386	1KΩ, Trimming
RM10	4822 100 20681	2.2KΩ, Trimming
RM59	4822 100 11386	1KΩ, Trimming
RM60	4822 100 20681	2,2KΩ, Trimming
▲R801	4822 116 60307	1Ω ±5% ½W, Fusible
▲R802	4822 116 60308	2.2Ω ±5% ½W, Fusible
▲R803	4822 115 90166	10Ω ±2% ¼W, Fuse
GU01	4822 111 91073	47KΩx5, Array
		PU03-SEMICONDUCTORS
DM01	4822 130 32508	Diode RL103E/DSF10C
DM51	4822 130 32508	Diode RL103E/DSF10C
DU01	4822 130 33305	Diode 1SS176, etc.
DU02	4822 130 33305	Diode 1SS176, etc.
DU04	4822 130 33305	Diode 1SS176, etc.
DU11	4822 130 33305	Diode 1SS176, etc.
DU12	4822 130 33305	Diode 1SS176, etc.
DU53	4822 130 32508	Diode RL103E/DSF10C
DU54	4822 130 33305	Diode 1SS176, etc.
▲D801 ~ ▲D810	4822 130 32508	Diode RL103E/DSF10C
D811	4822 130 33948	Zener RD5.6JB2/MTZJ5.6B
QM01	4822 130 42682	Transistor, Digital DTA144ES
QM02	4822 130 61725	Transistor 2SD2010
QM03	4822 130 42682	Transistor, Digital DTA144ES
QM04	4822 130 61892	Transistor 2SD2144S(U, V)
QM05	4822 130 61892	Transistor 2SD2144S(U, V)
QM06	4822 130 60588	Transistor, Digital DTC114ES
QM07	4822 130 61189	Transistor, Digital DTC114TS
QM08	4822 130 61189	Transistor, Digital DTC114TS
QM51	4822 130 42682	Transistor, Digital DTA144ES
QM52	4822 130 61725	Transistor 2SD2010
QM53	4822 130 42682	Transistor, Digital DTA144ES
QM54	4822 130 61892	Transistor 2SD2144S(U, V)
QM55	4822 130 61892	Transistor 2SD2144S(U, V)
QM56	4822 130 61189	Transistor, Digital DTC114TS
QR01	4822 130 42594	Transistor, Digital DTC144ES
QR21	4822 209 63044	IC LC6543H
QR22	4822 209 63042	IC MC74HC10N
QR23	4822 130 61189	Transistor, Digital DTC114TS

REF. DESIG.	PART NO.	DESCRIPTION	
QU01	4822 209 63045	IC	μPD75004CU-036
QU02	4822 130 61189	Transistor, Digital	DTC114TS
QU03	4822 130 42682	Transistor, Digital	DTA144ES
QU04	4822 130 42682	Transistor, Digital	DTA144ES
QU05	4822 130 42682	Transistor, Digital	DTA144ES
QU06	4822 130 60588	Transistor, Digital	DTC114ES
QU07	4822 130 60588	Transistor, Digital	DTC114ES
QU08	4822 130 60588	Transistor, Digital	DTC114ES
QU09	4822 130 42682	Transistor, Digital	DTA144ES
QU10	4822 130 60588	Transistor, Digital	DTC114ES
QU11	4822 130 42682	Transistor, Digital	DTA114ES
QU12	4822 130 61189	Transistor, Digital	DTC114TS
QU13	4822 130 61189	Transistor, Digital	DTC114TS
QU14	4822 130 42594	Transistor, Digital	DTC144ES
QU15	4822 130 60588	Transistor, Digital	DTC114ES
QU55	4822 130 42682	Transistor, Digital	DTA144ES
▲Q801	4822 209 82829	IC	NJM78M15FA
▲Q802	4822 209 70385	IC	L78MR05
		PU03-MISCELLANEOUS	
XR02	4822 242 72223	Resonator, 4.00MHz	
XU01	4822 242 72194	Resonator, 4.19MHz	
▲S801	4822 276 11816	Push Switch, Power	
▲L801	4822 146 21581	Power Transformer [U]	
		PU63-POWER TRANSFORMER CIRCUIT BOARD (/01B/02B/07B)	
▲L801	4822 146 21571	Power Transformer /02B/07B	
	4822 146 21572	Power Transformer /01B	
		PX03-KEY-SW/LED METER CIRCUIT BOARD	
DX01	4822 130 80326	L.E.D.	LT3D8B (RED)
DX02	4822 130 80326	L.E.D.	LT3D8B (RED)
DX03 ~ DX06	4822 130 82365	L.E.D.	LT5K8B (GRN)
DY01 ~ DY14	4822 130 33305	Diode	1SS176, etc.
DY21	4822 130 80326	L.E.D.	LT3D8B (RED)
DY22	4822 130 82365	L.E.D.	LT5K8B (GRN)
DY23	4822 130 81714	L.E.D.	LT3H44B (YEL)
DY29	4822 130 82365	L.E.D.	LT5K8B (GRN)
DY51	4822 130 82365	L.E.D.	LT5K8B (GRN)
DY52	4822 130 82365	L.E.D.	LT5K8B (GRN)
DY53	4822 130 82365	L.E.D.	LT5K8B (GRN)
DY71	4822 130 80326	L.E.D.	LT3D8B (RED)
DY72	4822 130 82365	L.E.D.	LT5K8B (GRN)
DY73	4822 130 82365	L.E.D.	LT5K8B (GRN)
QX01	4822 209 63039	IC	IR2E24
QY01	4822 130 42715	Transistor	2SA608SP, etc.
QY02	4822 130 42715	Transistor	2SA608SP, etc.
SY21 ~ SY31	4822 276 12455	Push Switch, Tact	
SY51	4822 276 12455	Push Switch, Tact	
SY52	4822 276 12455	Push Switch, Tact	
SY53	4822 276 12455	Push Switch, Tact	

NOTE ON SAFETY:
Symbol ▲ Fire or electrical shock hazard. Only original parts should be used to replace any part marked with symbol ▲ . Any other component substitution (other than original type), may increase risk of fire or electrical shock hazard.

56.1

Service Manual

NMZ-5PB
NMZ-5RP

Recorders tape deck

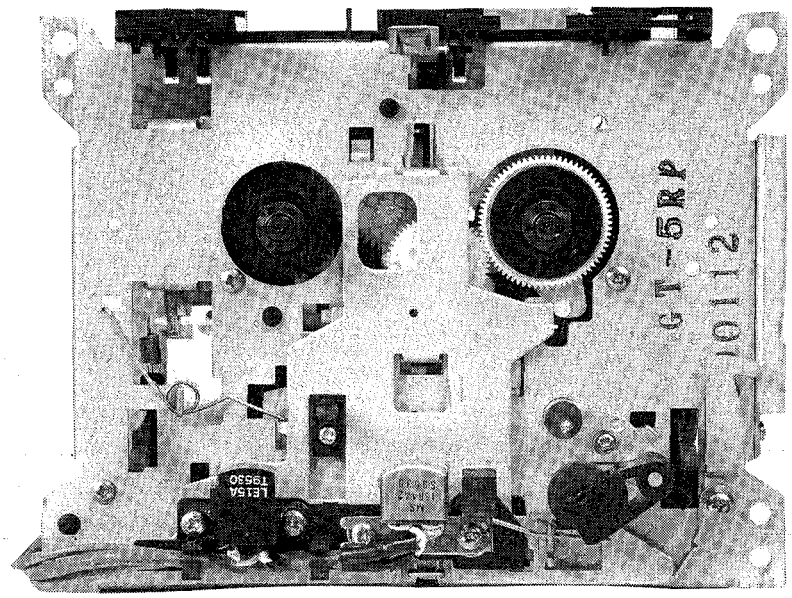

(GB)
Safety regulations require that the set be restored to its original condition and that parts which are identical with those specified be used.

marantz®

model NMZ-5PB/5RP

First issue: 1990

4822 725 50932

56.1

EXPLODED VIEW

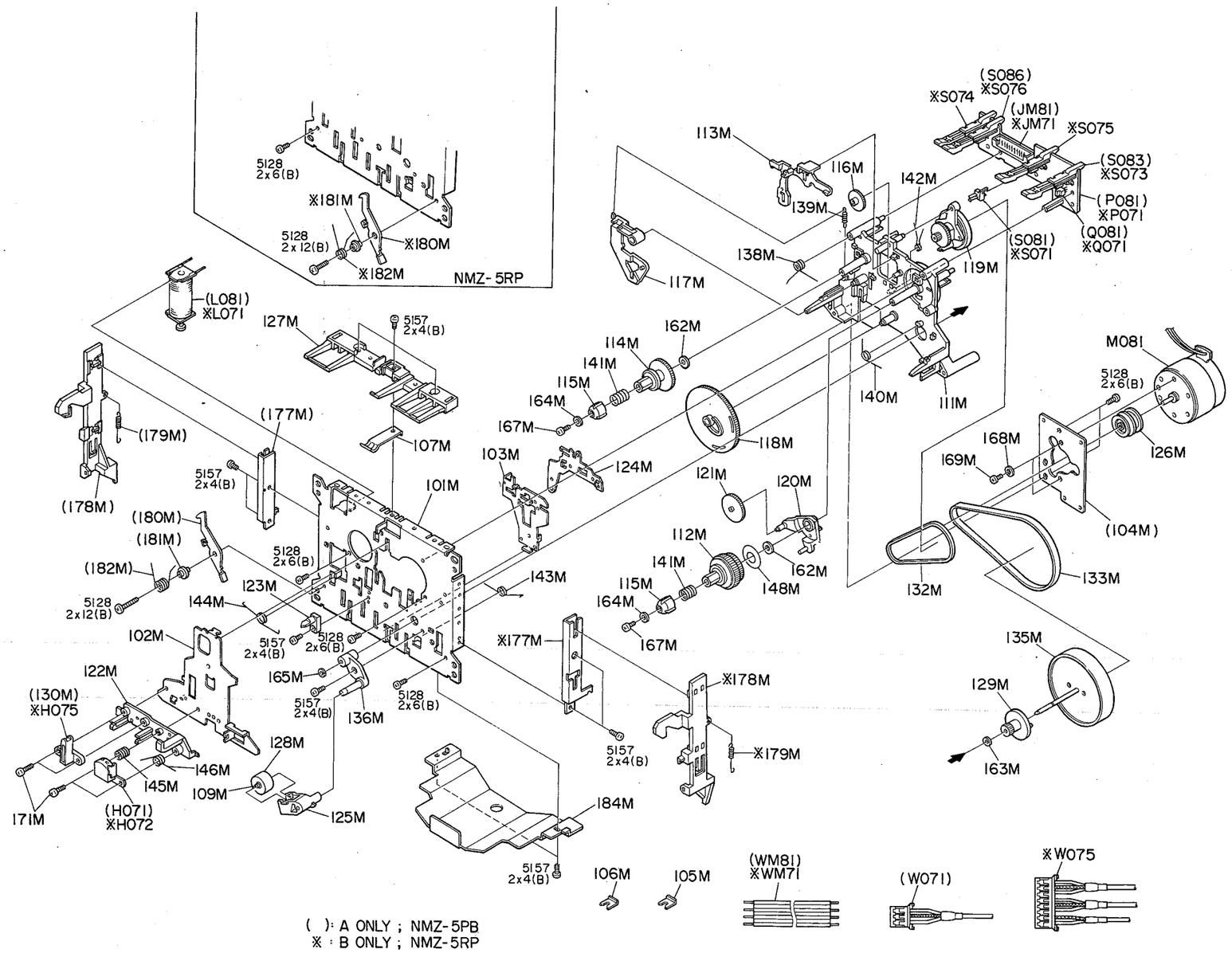

REF. DESIG.	PART NO.	DESCRIPTION	
107M	4822 492 70801	Leaf Spring, Pack	
112M	4822 528 10807	Reel Assembly (T)	
114M	4822 528 10808	Reel Assembly (S)	
115M	4822 462 71719	Cap (B), Reel	
116M	4822 522 32978	Gear, FF	
118M	4822 522 32979	Gear, Play Cam	
121M	4822 522 32981	Gear, Play	
123M	4822 403 70199	Guide, Cassette	
126M	4822 528 40331	Pulley (C), Motor	
128M	4822 528 81426	Roller, Pinch	
129M	4822 528 60381	Gear, Flywheel	
130M	4822 403 70201	Guide, Tape	
132M	4922 358 31101	Belt (C), Clutch	
133M	4822 358 31099	Belt (C), Drive	
135M	4822 528 60382	Flywheel	
138M	4822 492 70803	Spring, Brake Arm	
139M	4822 492 42497	Spring, Trigger Arm	
140M	4822 492 33217	Spring, Play Arm	
141M	4822 492 33218	Spring, Reel	
142M	4822 492 70804	Spring, Clutch Arm	
143M	4822 492 42498	Spring, Shift	
144M	4822 492 42499	Spring, Head Chassis	
145M	4822 492 70805	Spring, Head	
146M	4822 492 70806	Spring, Pinch Roller	
179M	4822 492 33216	Spring, Eject Lever	
182M	4822 492 42494	Spring, Eject Lock	NMZ-5PB
		Spring, Eject Lock	NMZ-5RP
H071	4822 249 10422	Head, Play	NMZ-5PB
H072	4822 249 10422	Head, Rec/Play	NMZ-5RP
H075	4822 249 40274	Head, Erase	NMZ-5RP
L071	4822 281 50155	Solenoid Coil	NMZ-5RP
L081	4822 281 50155	Solenoid Coil	NMZ-5PB
M071	4822 361 30322	D.C. Motor	NMZ-5RP
M081	4822 361 30322	D.C. Motor	NMZ-5PB
Q071	4822 130 82364	Photo Unit	NMZ-5RP
Q081	4822 130 82364	Photo Unit	NMZ-5PB
S071	4822 271 30735	Mini Switch, Play	NMZ-5RP
S073	4822 271 30733	Mini Switch, Tape	NMZ-5RP
S074	4822 271 30733	Mini Switch, Rec	NMZ-5RP
S075	4822 271 30733	Mini Switch, Metal	NMZ-5RP
S076	4822 271 30733	Mini Switch, CrO_2	NMZ-5RP
S081	4822 271 30735	Mini Switch, Play	NMZ-5PB
S083	4822 271 30733	Mini Switch, Tape	NMZ-5PB
S086	4822 271 30733	Mini Switch, CrO_2	NMZ-5PB
W075	4822 321 60987	8P Head Wire Assembly	NMZ-5RP